ORDER NO. VRD8709M153

Service Manual

National/Panasonic VHS-C PAL HQ

VHS-C Movie

NV-MC10 EG/E B/A EN/EM EA/EP

AC Adaptor

VW-AMC1 EG/E B/A EN/EM EA/EP

General Description
Adjustment Procedures
Block/Schematic Diagrams
Exploded Views/Parts List

National/Panasonic

Matsushita Electric Trading Co., Ltd.
P.O. Box 288, Central Osaka Japan

INTRODUCTION

This service manual contains technical information which will allow service technicians to understand and service this model.
Section 1 presents you with some general information of features and controls, enabling you to become familiar with each function.
Section 2 contributes to your mechanical and electrical adjustment as well disassembly and replacement procedures.
In the case of very common information relating to other models like mechanical adjustments, please refer to each service manual.
Section 3 contains block diagrams which offers you information for checking and understanding each circuit. Schematic diagrams which give you detailed information such as waveforms, voltage data, function e.t.c...
Section 4 contains exploded views and parts list.
Please place orders using the parts list and not the drawing reference numbers.
If the circuit is changed or modified, this information will be followed by supplementary service manual to be filed with original service manual.

CONTENTS

CHAPTER 1 NV-MC10EG/B/E/EN/A/EA/EM/EP

CHAPTER 2 VW-AMC1EG/B/E/EN/A/EA/EM/EP

IMPORTANT
Your attention is drawn to the fact that recording of pre-recorded tapes or discs or other published or broadcast material may infringe copyright laws.

WARNING
TO PREVENT FIRE OR SHOCK HAZARD, DO NOT EXPOSE THIS EQUIPMENT TO RAIN OR MOISTURE.

VHS-C Movie NV-MC10
•The rating plate is on the bottom side of the VHS-C Movie.
AC Adaptor VW-AMC1
•The rating plate is on the bottom panel of the unit.

•This apparatus was produced to BS 800:1983.

FOR YOUR SAFETY

■ **AC MAINS LEAD CONNECTION.**
(VW-AMC1 U.K. model only.)
The wires in the mains lead of this apparatus are coloured in accordance with the following code.

Important

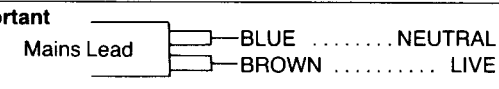

As the colours of the wires in the mains lead may not correspond with the coloured markings identifying the terminals in your plug, proceed as follows: The wire which is coloured BLUE must be connected to the terminal which is marked with the letter N or coloured BLACK. The wire which is coloured BROWN must be connected to the terminal which is marked with the letter L or coloured RED.

VHS-C Movie

NV-MC10 EG/E B/A EN/EM EA/EP

SPECIFICATIONS

ITEM	SPECIFICATION
POWER	Source: BATTERY; DC 9.6 V Consumption; Recording mode; 8.3 W (Battery operation)
RECORDING SYSTEM	4 rotary heads, helical scanning system PAL
TAPE FORMAT	VHS-C Cassette Tape (Tape width 12.7 mm)
TAPE SPEED	SP mode: 23.39 mm/s LP mode: 11.70 mm/s Record/Playback Time SP mode: 30 min. with NV-EC30HG LP mode: 60 min. with NV-EC30HG FF/REW Time less than 3 min. with NV-EC30HG
CAMERA	PICK-UP ELEMENT: CCD (Charge Coupled Device)
	STANDARD ILLUMINATION: 1,400 lux
	MINIMUM REQUIRED ILLUMINATION: 15 lux
	LENS: Built-in 6 : 1 Power Zoom Lens with MACRO Function, Auto Iris, Auto Focus System, F1.2 (9～54 mm), Filter Diameter/ϕ49 mm
	VIEW FINDER: 2/3″ B/W Electric View Finder
	WHITE BALANCE: Auto White Balance/ Indoor/Outdoor
VIDEO	HEADS: 8 rotary heads, 1 flging erase head
	OUTPUT: 8 PIN CONNECTOR; 1.0 Vp-p 75Ω terminated

ITEM	SPECIFICATION
AUDIO	HEAD: 1 Stationary head (Normal Audio)
	INPUT: MIC IN (M3); −70 dB, 4.7 kΩ unbalanced
	OUTPUT: 8 PIN CONNECTOR; −8 dB 1 kΩ unbalanced
WEIGHT	Approx. 1.22 kg (without Battery Pack)
DIMENSIONS	120.5(W) × 150.5(H) × 274.5(D) mm
ACCESSORIES	1 pc. AV Output Cable 1 pc. AC Adaptor (VW-AMC1EG/B/E/EP/EN/EA/EM) 1 pc. Battery Pack (VW-VBC1E/EN) for NV-MC10EG/B/E/EP/A/EA 2 pc. Battery Pack (VW-VBC1EN) for NV-MC10EM 1 pc. Shoulder Strap 1 pc. AC Plug Adaptor for NV-MC10EM only 1 pc. RF Adaptor (VW-RFC1E/EN/A/EA) 1 pc. Battery for Clock 1 pc. VHS-C Cassette Adaptor (VW-TCA1E/EN) 1 pc. System Carring Case (VW-SHMC1E/EN) 1 pc. VHS-C Cassette Tape (NV-EC30HG/NV-EC30HGEN) 1 pc. Charactor Generator (VW-CG1E/EN) 1 pc. Car Battery Cord (VW-ACC5) 1 pc. Handgrip (VW-GPC1) 1 pc. Soft Case (VW-CB1) 1 pc. Pause Remote Control Unit (VW-RM1/VW-RM1EN)

Weight and dimensions shown are approximate.
Specifications are subject to change without notice.

CONTENTS

SECTION 1 GENERAL DESCRIPTION 1-1

1. HOW TO USE VHS-C MOVIE 1-1

1-1. FEATURES 1-1
1-2. CONTROLS AND COMPONENTS 1-1
1-3. ELECTRONIC VIEWFINDER 1-3
1-4. VHS-C MOVIE SYSTEM ACCESSORIES 1-3
1-5. SETTING OF THE DATE AND CLOCK & RECORING THE DATE/CLOCK INDICATIONS 1-4

SECTION 2 ADJUSTMENT PROCEDURES 2-1

2-1. DISASSEMBLY METHOD 2-1

2-1-1. DISASSEMBLY FLOW CHART 2-1
2-1-2. VTR SECTION 2-1
2-1-3. CAMERA SECTION 1 2-5
2-1-4. CAMERA SECTION 2 2-8
2-1-5. E.V.F. SECTION 2-8

2-2. PROCEDURE FOR CLEANING UPPER CYLINDER UNIT 2-9

2-3. REPLACEMENT AND ADJUSTMENT PROCEDURES 2-9

2-3-1. REPLACEMENT OF UPPER CYLINDER UNIT 2-9
2-3-2. REPLACEMENT OF CYLINDER UNIT 2-11
2-3-3. REPLACEMENT OF CAPSTAN MOTOR UNIT 2-11
2-3-4. ADJUSTMENT OF TENSION POST POSITION 2-13
2-3-5. HEIGHT ADJUSTMENT OF TAPE GUIDE POSTS (PRELIMINARY ADJUSTMENT) 2-13
2-3-6. TAPE INTERCHANGEABILITY ADJUSTMENT (FINAL ADJUSTMENT) 2-13
2-3-7. ASSEMBLY AND ADJUSTMENT PROCEDURE OF MECHANISM 2-16

Service Fixtures & Tools 2-21

2-4. ELECTRICAL ADJUSTMENT PROCEDURES 2-22

2-4-1. ELECTRICAL ADJUSTMENT FOR CAMERA SECTION 2-22
2-4-2. ELECTRICAL ADJUSTMENT FOR E.V.F. SECTION 2-34

LOCATION OF TEST POINTS & CONTROLS — Camera Section — 2-36
LOCATION OF TEST POINTS & CONTROLS — VTR Section — 2-38

2-4-3. ELECTRICAL ADJUSTMENT FOR VTR SECTION 2-39

SECTION 3 BLOCK DIAGRAMS & SCHEMATIC DIAGRAMS 3-1

3-1. OVERALL BLOCK DIAGRAM 3-1
3-2. CAMERA PROCESS BLOCK DIAGRAM 3-2
3-3. VIDEO RECORDER PROCESS BLOCK DIAGRAM 3-6
3-4. CAMERA OPERATION SCHEMATIC DIAGRAM 3-13
3-5. CAMERA OPERATION C.B.A. 3-13
3-6. PROCESS C.B.A. & ENCODER PACK C.B.A. 3-15
3-7. PROCESS & ENCODER PACK SCHEMATIC DIAGRAM 3-19
3-8. AUTO FOCUS SCHEMATIC DIAGRAM 3-24
3-9. AUTO FOCUS C.B.A. 3-26
3-10. SENSOR & C.D.S. PACK SCHEMATIC DIAGRAM 3-29

Technical Information

1. SELF-DIAGNOSING SYSTEM

The microprocessor IC601 (uPD75108G) has the programme for Self–diagnosing system, which provides a great deal of service information for quick troble–shooting.
If undsirable condition happen to the unit, the LEDs start to flash in different combination depending on the fault as shown in Fig. 1.

S-REEL LOCK

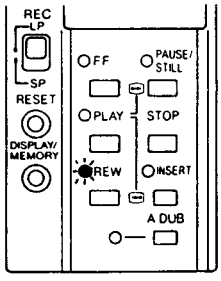

No supply Supply Reel Sensor input

T-REEL LOCK

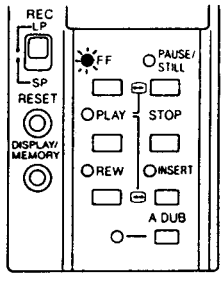

No supply Takeup Reel Sensor input

CYLINDER LOCK

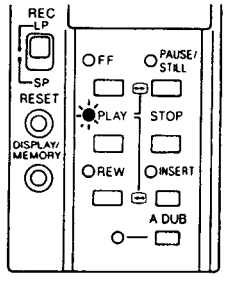

No supply Head Amp Switch input

UNLOADING LOCK

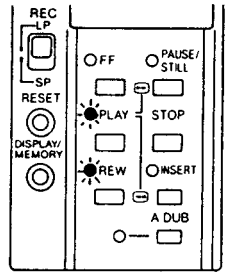

No rotation of Loading motor in unloading direction

LOADING LOCK

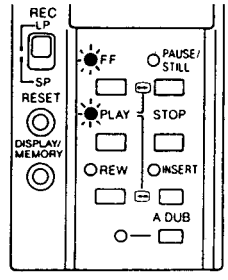

No rotation of Loading motor in

Note:
Connect the Diode between Pin2 and Pin1 as shown below.

P6302

COM	1
TEST 1	2
TEST 2	3

Diode is not specified

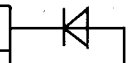

2. SERVICE CAUTION

1. Servicing the VTR Section

Remove Cabinet Parts and VTR C.B.A.s in the order described in the Disassembly Section and place them as shown in Fig. 2.
Connection of the Extension Cables (A) (VFKS0067), (B) (VFKS0068), (C) (VFK0429), (D) (VFKS0068), (E) (VFK0430), Y/C Separator Connection Cable (VFKS0074) and Y/C Separator (VFK0304) are necessary for servicing.

Note:
1. When unplugging or plugging in connectors use extreme caution.

(1) Connects the Extension Cable (A) (VFKS0067) between P2001 on the Main C.B.A. and P2601 on the Drive C.B.A.
(2) Connects the Extension Cable (B) (VFKS0068) between P6002 on the Main C.B.A. and Full Erase Head Cable.
(3) Connects the Extension Cable (C) (VFK0429) between P3502 on the Main C.B.A. and P5502 on the SP Head Amp C.B.A.
(4) Connects the Extension Cable (D) (VFKS0068) between P6002 on the Main C.B.A. and Cassette Down Detection Cable.
(It use only Recording Mode)
(5) Connect the Y/C Separator (VFK0304) to the Extension Cabel (P1002) using the Y/C Separator Connection Cable (VFKS0074).
(6) When accessing the Recording Mode, connect a jumper between Pin 1 and Pin 2 of P6006 on the Main C.B.A.
(7) When using the Y/C Separator (VFK0304), connect Pin 4 of P1002 to GND through a resistor (180ohm) to stabilize the video signal.

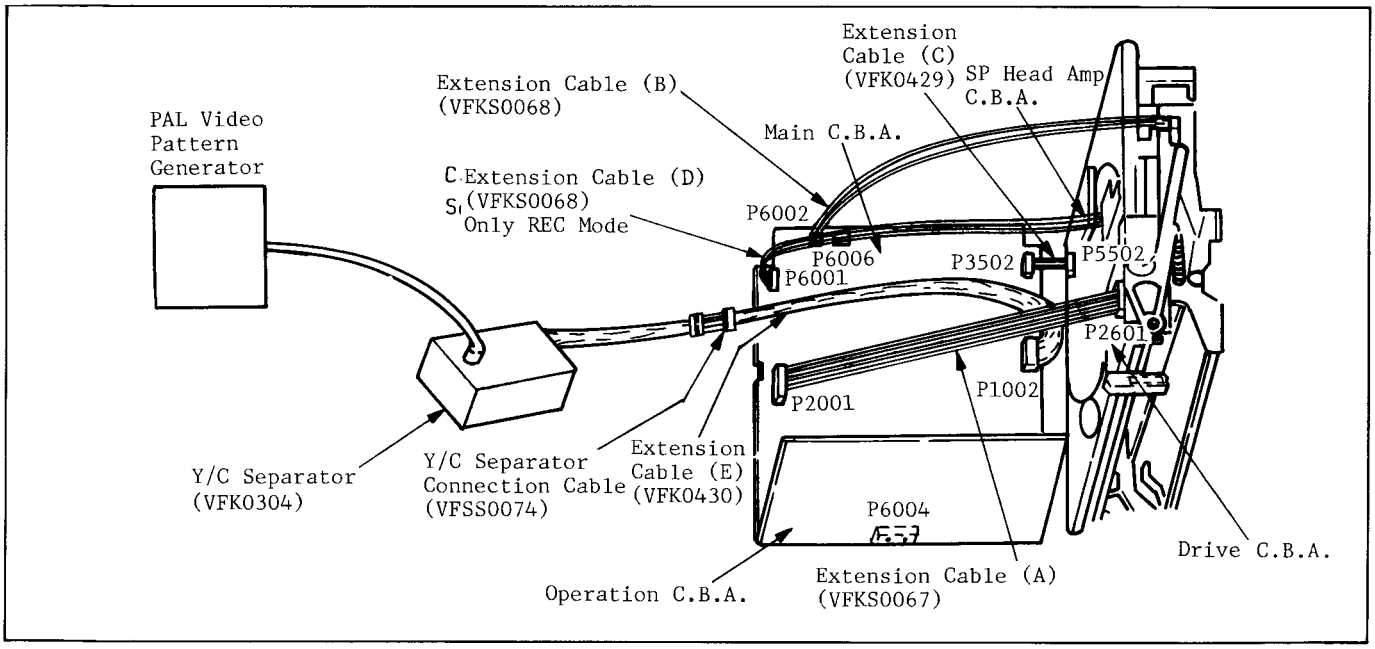

Fig. 2

2. Servicing the Camera Section

When servicing the Camera Section, connection of the Extension Cable (F) (VFK0380) and extension Cable (G) (VFKS0060) are necessary as shown in Fig. 3.

(1) Connects the Extension Cable (F) (VFK0380) between B302 on the Process C.B.A. and B201 on the Sensor C.B.A.
(2) Connects the Extension Cable (G) (VFKS0060) between BA305 on the Process C.B.A. and Zoom Motor Unit.

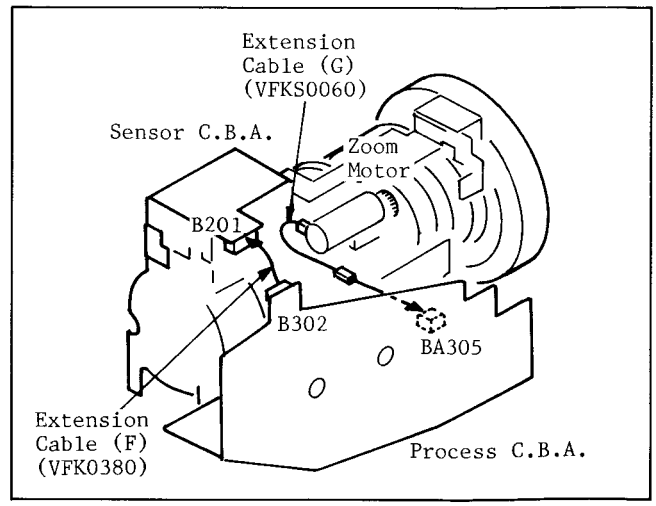

Fig. 3

3. How To Use Camera Holder Arm (VFK0431)

This Camera Holder Arm which is adjustable the span must be mounted to VFK0382 (Camera Holder of NV-M5) and it can be used with VFK0432 for camera adjustments or checking for NV-MC10.

(A) --- VFK0432 Holder Spacer (2pcs.)
(B) --- VFK0431 Camera Holder Arm
(C) --- XSN26+18 Screw (2pcs.)
(D) --- VFK0382 Camera Holder

(1) Fix the Holder Arm (4) and (5) temporarily by screw (1) as shown in Fig. 4.
(2) Mount the Camera Holder Arm (B) to the Camera Holder (D) by screws (2) and (3) as shown in Fig. 5.
(3) Tightn the screws (C) with the Holder Spacers (A) as shown in Fig. 4.

4. How To Connect the Y/C Separator snd Y/C Separator Connection Cable

When the Y/C Separator Connection Cable (VFKS0074) is used to connect to Y/C Separator the caution should be paid the following items :
*Cut off the marked portion of Y/C Separator output connector as shown in Fig. 6.

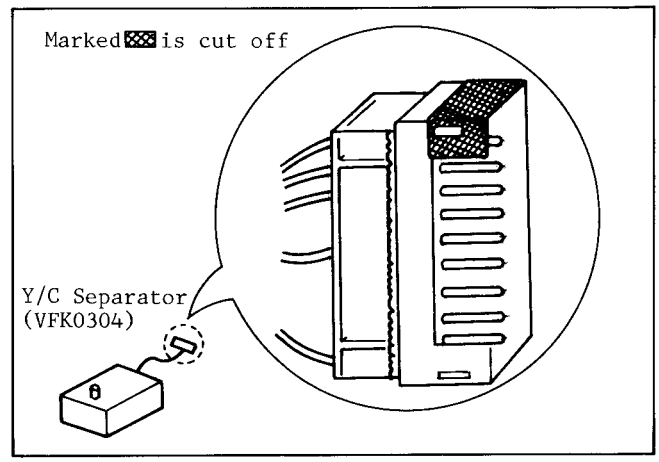

Fig. 6

Fig. 5

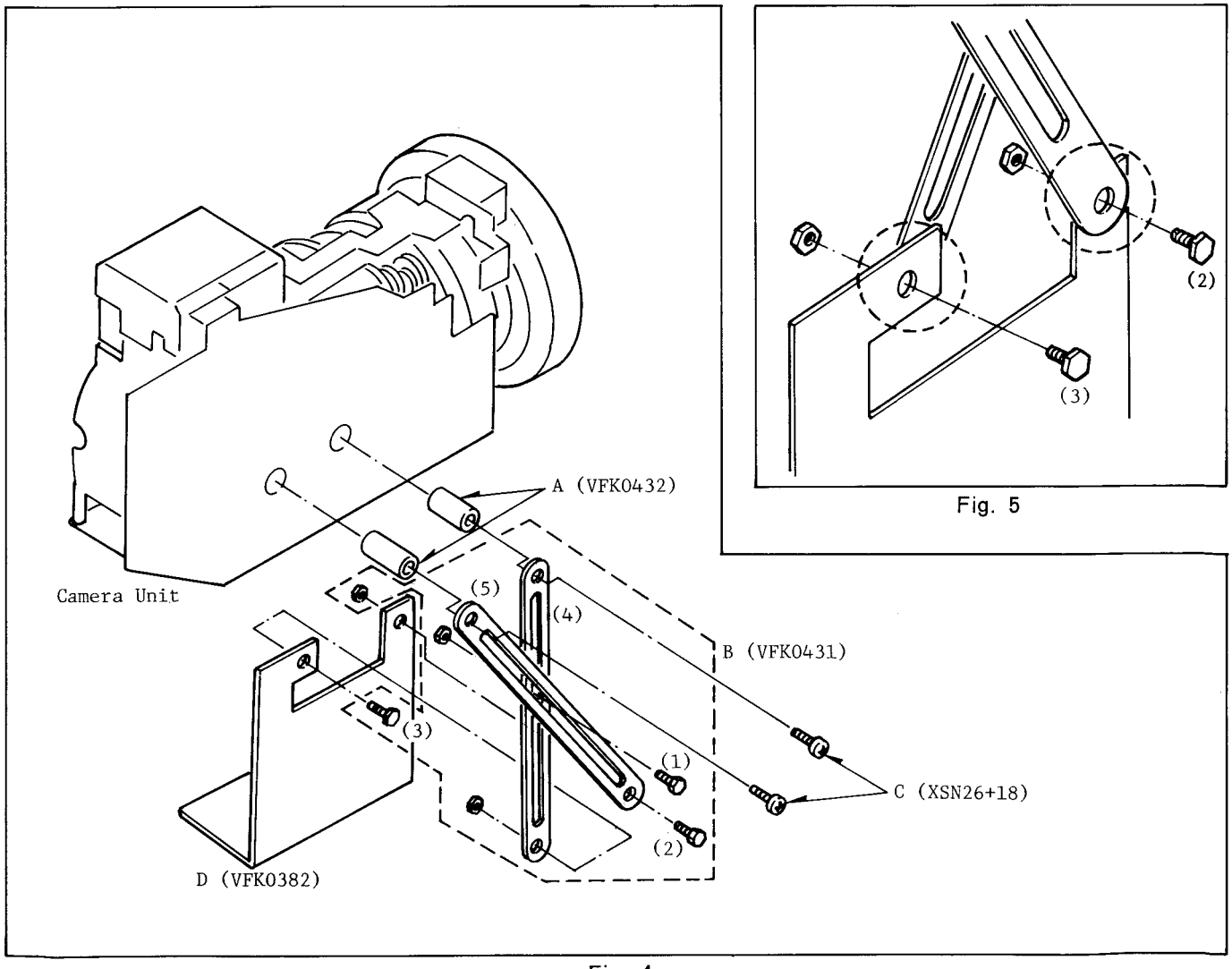

Fig. 4

5. Set Tracking Control to the Fixed position

If the Tracking Control is required to be in the fixed (neutral) position, push both of the tracking Control Up/Down Switchs, on the Main C.B.A., in at the same time in Playback Mode.

6. Manual Eject–Tape in and Carriage closed

(1) Remove Cassette Cover by removing 2 Screws.
(2) Push on upper end of Lock Lever to release cassette carriage.

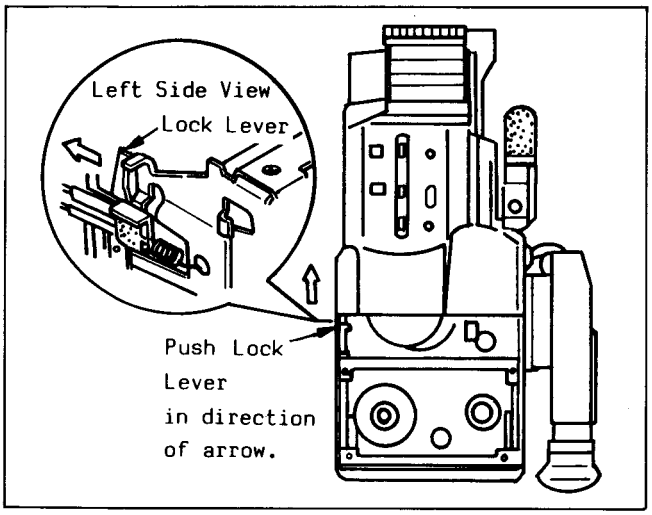

Fig. 7

7. Elimination of Tape slack

Before inserting the Cassette Tape in the VHS–C Movie, take up slack in the tape by turning the Takeup Tape Gear on the side of the Cassette Tape. Turn it in the direction of the arrow until no slack is evident and opposite reel begins to turn.

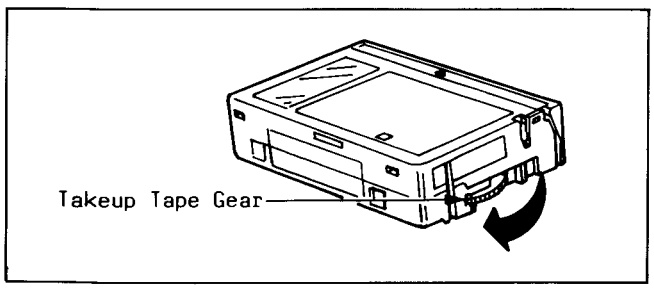

Fig. 8

8. Insertion (or Removal) of cassette Tape

As in Fig. 5, hold the tape vertically with fingers and thumb to insert or remove the tape. (Be sure to eliminate slack before inserting the tape.)

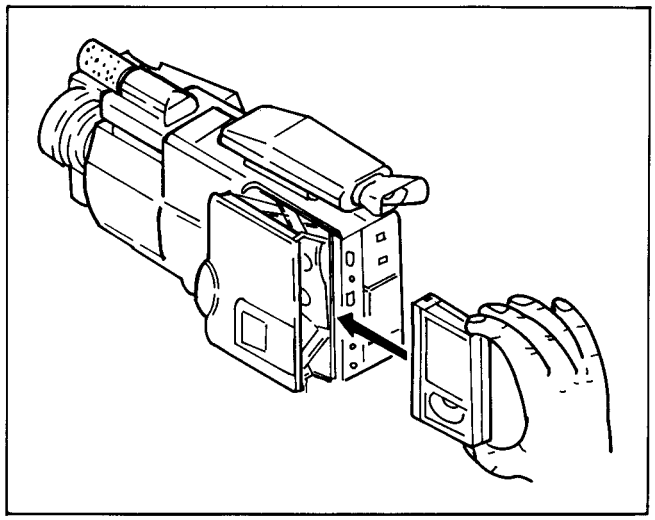

Fig. 9

9. Connection of the Flexible Cables to Trap Connectors

a. Removal

1. On the trap Connector, pull out on both ends of the Locking Tab surrounding the cable end to release the Trap on the Connector. Then pull Flexible Cable out to remove as shown in Fig. 6.

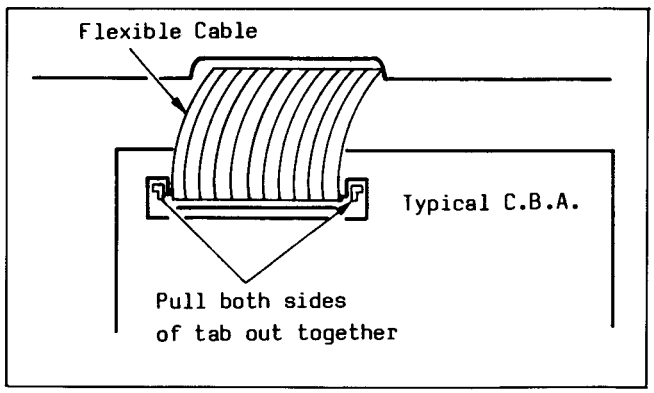

Fig. 10

b. Installation

1. Insert the end of the Flexible Cable into the Trap Connector so it lays smoothly across the slot.
2. Press the middle of the cable firmly against the Trap Connector slot, and hold it securly.
3. Without pinching the Cable, press the Locking Tabs in against the Trap Connector until both ends snap into their locked positions.
4. Pull lightly on the Cable to check for positive connection.

Note:
1) Take care when removing or installing the Flexible Cable to prevent Cable damage.

10. Service of Operation Bracket Unit

When removing of reinstalling the Operation Bracket Unit and Switch Cover, first install the Switch Cover over the Operation Key portion (CAMERA MODE) of the Operation Bracket Unit, and then install assembly parts.

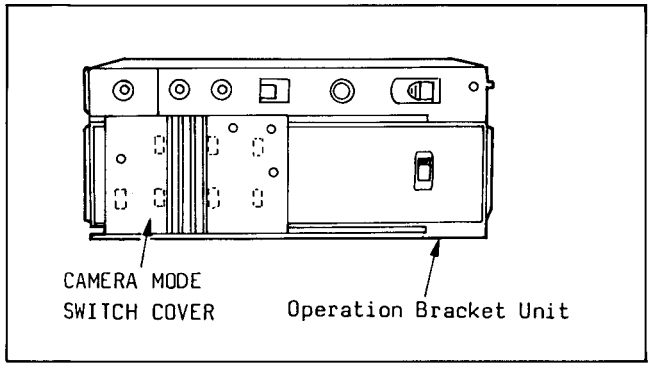

Fig. 11

11. How to read the Disassembly/Assembly

(For Cabinet Part)

Step /Loc No.	Part	REMOVAL		
		Fig. No.	Remove *UNLOCK/RELEASE/ UNPLUG/UNCLAMP /UNSOLDER	Note
1	Top Case	D2	2(S-1),*Connector	
①	③	⑤	⑥	

(For Mechanical Part)

STEP /LOC No.	STARTING No.	PART		REMOVAL		INSTALLATION
				Fig. No.	REMOVE *UNHOOK/UNLOCK/RELEASE	ADJUSTMENT #CONDITION
①	1	GROUNDING PLATE	B	M27	*Shield Case-Top, *Connector P13, (S-1)	
②	1	D.D. CYLINDER UNIT	B	M27	3(S-2), Connectors	See, Replacement of D.D. Cylinder Unit.
③	3	TAKEUP REEL GEAR	T	M26,28	(C-1), (W-1) <Note 1>	(+)
①	②	③	④	⑤	⑥	⑦

1 : Order of steps in Procedure.
When ressembling, perform the step(s) in the reverse order. These numbers are also used as the identification (Location) No. of parts in Figures.
2 : Starting No. followed by corresponding part which can be removed at this stage.
3 : Part to be removed or installed.
4 : Location of part
T = Top B = Bottom
5 : Fig. No. showing Procedure.
6 : Indentification of part to be removed, unhooked, unlocked, released, unplugged, unclamped or unsoldered.
C = Cut Washer P = Spring
R = Retaining Ring S = Screw
W = Washer
* = Unhook, unlock or release
3(S-2) = 3 Screws (S-2)
7 : Adjustment information for installation.
= Condition for adjustment.
(+) = Refer to Exploded Views for Lubricat Information.
* = Remark

3-11. SENSOR C.B.A. & C.D.S. PACK C.B.A. 3-31
3-12. E.V.F. SCHEMATIC DIAGRAM 3-33
3-13. E.V.F. C.B.A. 3-35
3-14. VTR OPERATION SCHEMATIC DIAGRAM 3-37
3-15. VTR OPERATION C.B.A. 3-37
3-16. CAMERA INTERCONNECTION SCHEMATIC DIAGRAM 3-39
3-17. SP HEAD AMP SCHEMATIC DIAGRAM 3-41
3-18. SP HEAD AMP C.B.A. 3-43
3-19. LP HEAD AMP SCHEMATIC DIAGRAM 3-45
3-20. LP HEAD AMP C.B.A. 3-47
3-21. LUMINANCE/CHROMINANCE C.B.A. 3-49
3-22. LUMINANCE/CHROMINACNE SCHEMATIC DIAGRAM 3-53
3-23. POWER SUPPLY/AUDIO/SUB VIDEO SCHEMATIC DIAGRAM 3-58
3-24. SERVO SCHEMATIC DIAGRAM 3-61
3-25. MAIN (POWER SUPPLY/AUDIO/SUB VIDEO/SERVO/SYSTEM CONTROL) C.B.A. 3-63
3-26. MAIN (SYSTEM CONTROL/POWER SUPPLY/AUDIO/SUB VIDEO/SERVO) C.B.A. 3-67
3-27. SYSTEM CONTROL SCHEMATIC DIAGRAM 3-71
3-28. DRIVE SCHEMATIC DIAGRAM 3-76
3-29. DRIVE C.B.A. 3-78
3-30. CIRCUIT BOARD LAYOUT 3-80
3-31. VTR INTERCONNECTION SCHEMATIC DIAGRAM 3-81
3-32. ICs & TRs INFORMATION 3-84

SECTION 4 EXPLODED VIEWS & PARTS LIST 4-1
4-1. EXPLODED VIEW 4-1
1. VTR MECHANISM SECTION 4-1
2. CAMERA LENS SECTION 4-2
3. CHASSIS & FRAME SECTION 4-3
4. E.V.F. SECTION 4-4
5. PACKING PARTS SECTION (NV-MC10B/EN/A/EM/EA/EP) 4-5
6. PACKING PARTS SECTION (NV-MC10EG/E) 4-6
MECHANICAL REPLACEMENT PARTS LIST
ELECTRICAL REPLACEMENT PARTS LIST

SECTION 1
GENERAL DESCRIPTION

1. HOW TO USE VHS-C MOVIE

1-1. FEATURES

1. Piezo Auto Focus

The focus is always automatically and precisely adjusted under all shooting situations. There is no need to manually adjust the focus; manual focus adjustment is also possible.

2. LP Mode for Doubled Recording Time

It extends the maximum recording time to a full 1 hour.

3. Cue & Review Playback

Convenient for fast-forwarding or rewinding the tape while watching the picture.

4. Compact, Lightweight and Super-Portable

With a weight of only 1.22kg, the VHS-C Movie is handy to use and carry along.

5. 3-Way Power Supply

The VHS-C Movie can be operated on 3 different power sources; rechargeable battery pack, AC adaptor or car battery cord.

6. Auto White Balance

The white balance is fully automatically adjusted and continuously readjusted to any changes in illumination during shooting. Manual adjustment is also possible.

7. Alarm Indications

Various warning indications prevent operating mistakes and always assure successful results.

8. 6× Power Zoom Lens

Powerful, smooth zooming between wide-angle and telephoto is simple with convenient push-button control.

9. High Speed Shutter Function

This function makes it possible to catch even super-fast action with sharp contours and amazing detail.

10. Audio Dubbing Function

The Audio Dubbing function allows replacing the originally recorded sound with narration, back-ground music or special sound effects.

11. Insert Editing

Insert Editing (or Insert Recording) is handy for editing tapes by inserting new scenes into an already recorded video tape.

12. HQ (High Quality) Picture System

Video recorders carrying the HQ symbol mark feature the new VHS High Quality Picture System. This system assures complete compatibility with VTRs that use the conventional VHS system.

1-2. CONTROLS AND COMPONENTS

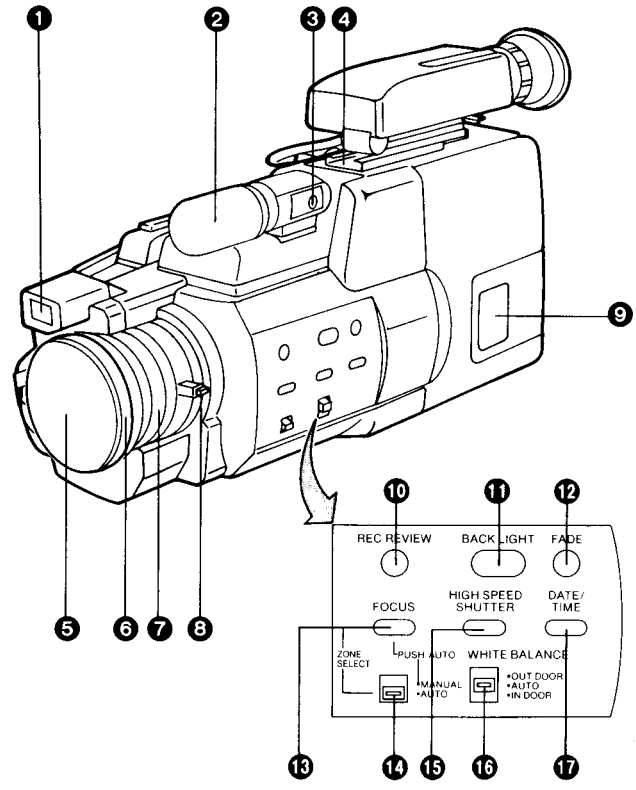

1. White Balance Sensor Window
2. Built-in Microphone
3. Extrnal Microphone Socket
4. Accessory Shoe
5. Lens Cap
6. Lens Hood
7. Focus Ring
8. Manual Zoom Lever with Macro Button
9. Cassette Compartment
10. Rec Review Button
11. Back Light Button
12. Fade Button
13. Focus Adjusting Button/Zone Selector
14. Focus Mode Selector
15. High Speed Shutter Selector
16. White Balance Mode Selector
17. Date/Time Selector

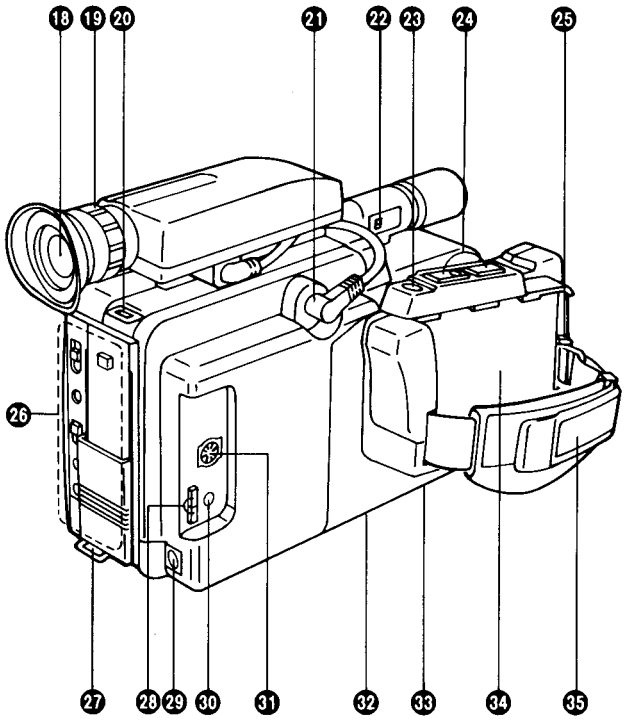

㉖ General Operation Controls

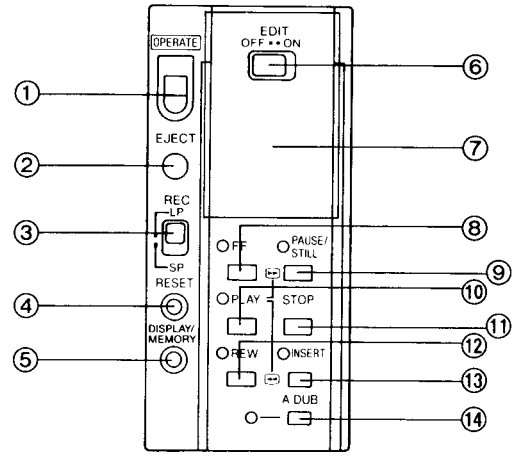

⑦ **Function of the Camera/VTR Operation Selector Cover**
Before starting camera recording, slide this cover close to conceal the Tape Running Buttons and render them inoperative.
For playback, audio dubbing, tape copying and other VTR operations, slide this cover up. This renders the Start/Stop Button and other operation controls for camera recording inoperative.

⑱ Electronic Viewfinder
⑲ Eyepiece Corrector Control
⑳ Metal Fitting for Shoulder Strap
㉑ EVF Terminal
㉒ Microphone Sensitivity Selector
㉓ Start/Stop Button
㉔ Power Zoom Control Buttons
㉕ Battery Locking Lever
㉖ General Operation Controls
㉗ Metal Fitting for Shoulder Strap
㉘ Tracking Up/Down Buttons
㉙ DC Input Socket
㉚ Remote Control Socket
㉛ Adaptor Socket
㉜ Tripod Receptacle
㉝ Battery Compartment for Auto Date/Clock
㉞ Battery Holder
㉟ Grip Belt

① Operation On/Off Switch
② Eject Button
③ Recording Speed Selector
④ Reset Button
⑤ Display Button
⑥ Edit Switch
⑦ Camera/VTR Operation Selector Cover
⑧ Fast Forward/Cue Button
⑨ Pause/Still Button
⑩ Play Button
⑪ Stop Button
⑫ Rewind/Review Button
⑬ Insert Button
⑭ Audio Dubbing Button

1-3. ELECTRONIC VIEW FINDER

The following indications are displayed in the Electronic Viewfinder (EVF) to inform you of the operating conditions of the VHS-C Movie.

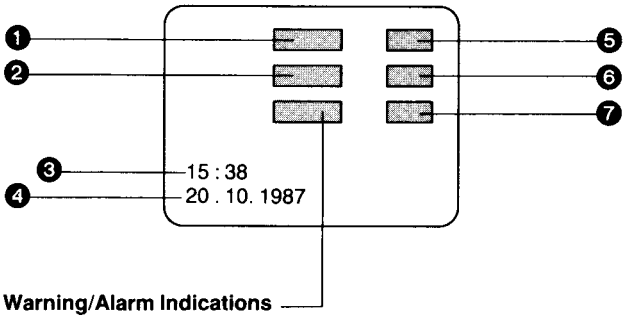

Warning/Alarm Indications

BATT — There is little battery power left. The VHS-C Movie will be turned off in a few minutes. Replace the battery pack by a fully recharged one.

TAPE — It is impossible to record because the erasure prevention tab of the cassette is not intact.

END — The tape has almost reached its end. Replace the tape with a new one.

DEW — When condensation has formed inside the VHS-C Movie, the "DEW" indication will flash and a few seconds later, the unit will turn itself off.

❶ Remaining Battery Power Indication

E---F The "▬" indications begin to disappear from right to left as the power of the battery pack weakens.

❷ Counter Indication

M0123 Tape Counter
1 2 :34 Lap Time Counter

❸ Clock Indications

❹ Date Indications

❺ Recording/Insert Indication

REC Recording
--- Recording Pause
INST Insert
--- Insert Pause

❻ Recording Mode Indication

SP SP mode
LP LP mode

❼ Manual White Balance Indication

OUT OUTDOOR
IN INDOOR

High Speed Shutter Mode Indication

1/500 1/500 sec.
1/1000 1/1000 sec.

- Some of the above indications may light up alternately at the same place in the EVF to indicate the corresponding operating condition or warning.

1-4. VHS-C MOVIE SYSTEM ACCESSORIES

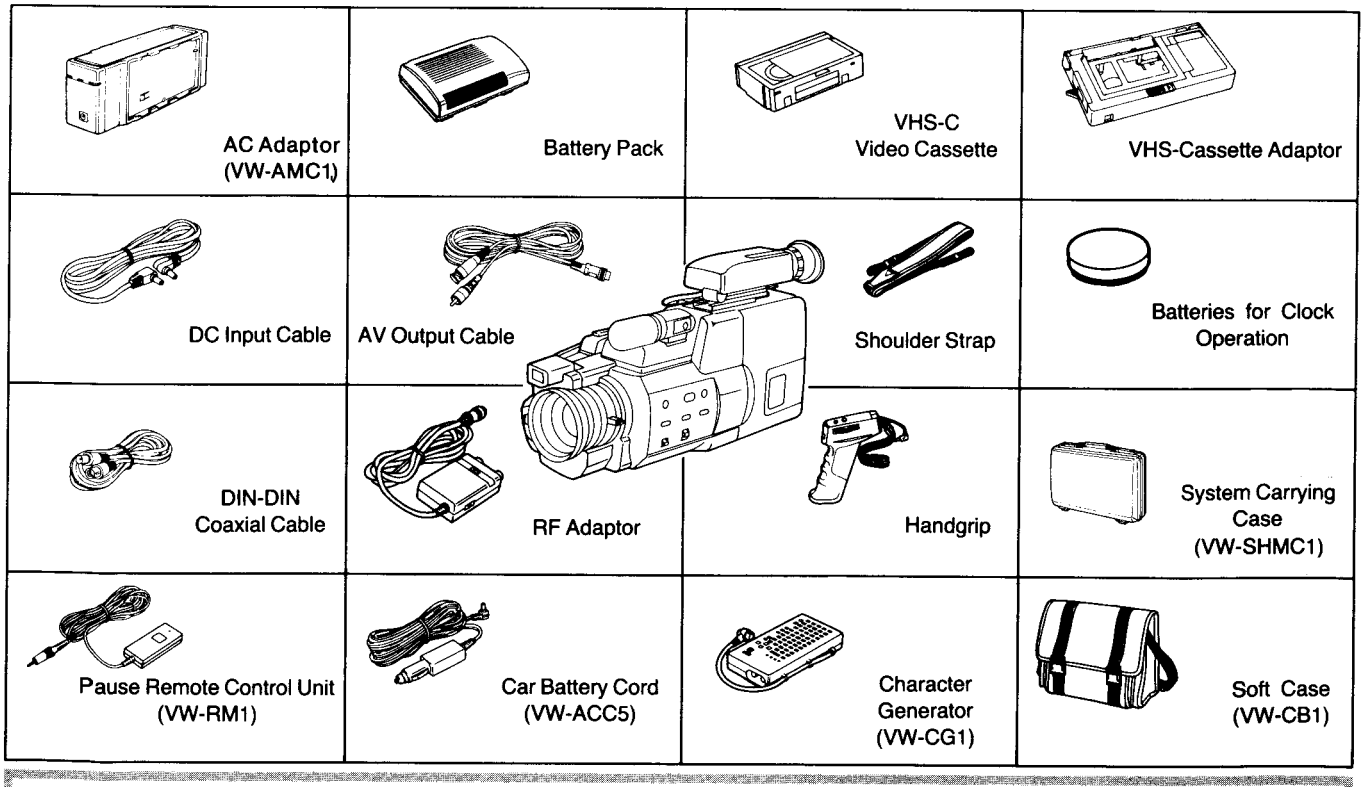

CAUTION: TO PREVENT FIRE OR SHOCK HAZARD AND ANNOYING INTERFERENCE, USE THE RECOMMENDED ACCESSORIES ONLY.

1-5. SETTING OF THE DATA AND CLOCK & RECORDING THE DATE/CLOCK INDICATIONS

How to Insert the Battery for the Clock Operation

❶ Remove the lid on the bottom of the VHS-C Movie with a (+) screwdriver.

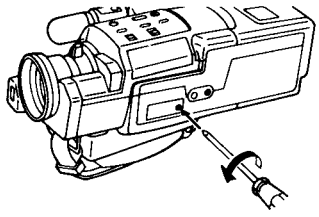

❷ Insert the "LR1130" size battery with the polarities (⊕ and ⊖) aligned correctly and then replace the lid.
- The clock starts working as soon as the battery is inserted.

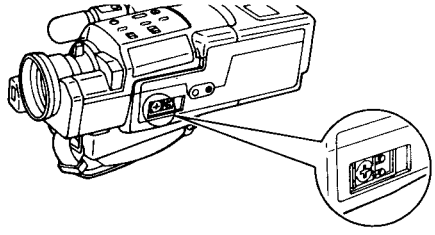

The "LR1130" size battery (supplied) is necessary for the operation of the built-in digital clock, and to memorize the Date/Clock and the Tape Counter Indications when the VHS-C Movie is turned off.

CAUTION FOR BATTERY REPLACEMENT
- The life of the battery is about one year, however, it depends on the frequency of use. Inspect and if necessary, replace the battery once a year.
- Load the new battery with their polarities (⊕ and ⊖) aligned correctly.
- Do not apply heat to battery, or internal short-circuit may occur.
- Remove spent battery immediately and dispose of it.

Setting of the Date and Clock

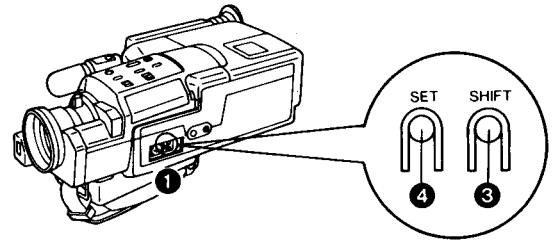

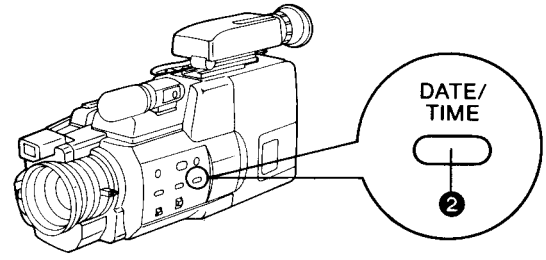

❶ Open the lid of the Battery Compartment.

❷ When the Date/Time Selector is pushed, the indication shown on the right will appear in the EVF.

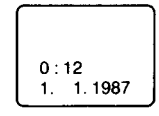

- If no battery is inserted, the indication "PLEASE SET BATTERY" will light up. In this case, insert the battery.

❸ When the Shift Button is pushed, the flashing portion will be changed in the following sequence.

Year → Month → Date → Hour → Minute

❹ When the Set Button is pushed, the flashing portion displayed will be changed in the following sequence.

YEAR: 1987→1988→ ..... →2086
MONTH: 1→2→ ..... →12
DATE: 1→2→ ..... →31
HOUR: 0→1→ ..... →23
MINUTE: 00→01→ ..... →59

- Repeat procedures ❸ and ❹ until all five items have been set.
- Once the time and date are set, press the Shift Button in response to a precise time signal so that the clock may begin to function.

Recording the Date/Clock Indications

When the Date/Time Selector is pushed repeatedly, the indication will change in the following sequence.

To record neither the Date nor the Clock Indication: → **To record the Date and Clock Indications:** → **To record only the Date Indication:**

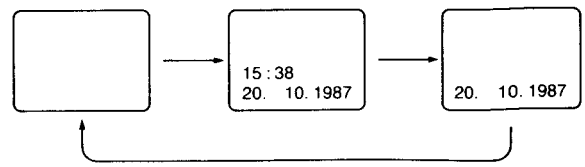

SECTION 2
ADJUSTMENT PROCEDURES

2-1. DISASSEMBLY METHOD

2-1-1. DISASSMBLY FLOW CHART

This flow chart indicates the disassembly steps of the cabinet parts and the P.C. Boards in order to gain access to item(s) to be serviced. When re-assembling, perform the step(s) in the reverse order.

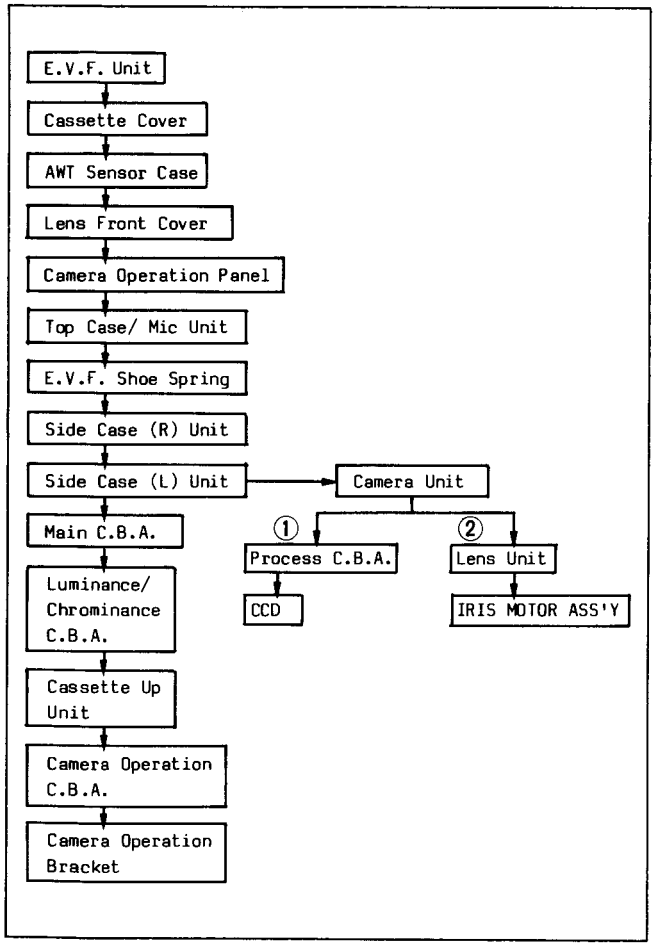

Fig. D1

Note:
a. When removing the cabinet, work with care so as not to break the locking Portions.
b. Place a cloth or some other soft material under the P.C. Boards or Unit to prevent damage.
c. When reinstalling, ensure that the connectors are connected and electrical components have not been damaged.
d. Do not supply power to the Unit during disassembly.

2-1-2. VTR SECTION

Step /Loc No.	Part	REMOVAL		
		Fig. No.	Remove *UNLOCK/RELEASE/ UNPLUG/UNCLAMP /UNSOLDER	Note
①	E.V.F. Unit	D2	*Connector	1
②	Cassette Cover	D2	2(S-1),	
③	AWT Sensor Case	D3	2(S-2)	
④	Lens Front Cover	D3	(S-3)	
⑤	Camera Operation Panel	D2	2(S-4)	
⑥	Top Case/ MIC Unit	D4	2(S-5), *Connector, *Locking Portions	2
⑦	E.V.F. Shoe Spring	D4	(S-6)	3
⑧	Side Case (R) Unit	D4, D5	2(S-7),(S-8), 3(S-9), *Connectors	
⑨	Side Case (L) Unit	D6	2(S-10),(S-11), *Connectors	
⑩	Main C.B.A.	D7	3(S-12), (L-1), *Connectors	4
⑪	SP Head Amp C.B.A.	D7	(S-13),(S-14), *Connector, spacer	
⑫	Luminance/ Chrominance C.B.A.	D7, D8	*(L-2), (L-3), *Connectors *U-Notches	5
⑬	Cassette Up Unit	D9	2(S-15)	6

Step /Loc No.	Part	REMOVAL		
		Fig. No.	Remove *UNLOCK/RELEASE/ UNPLUG/UNCLAMP /UNSOLDER	Note
⑭	Camera Operation C.B.A.	D6	(S-16), Connectors	
⑮	Camera Operation Bracket	D6	----------	7

List of Abbreviations:
2(S-1) = 2 Screws (S-1), (L-1) = Locking Tab (L-1)

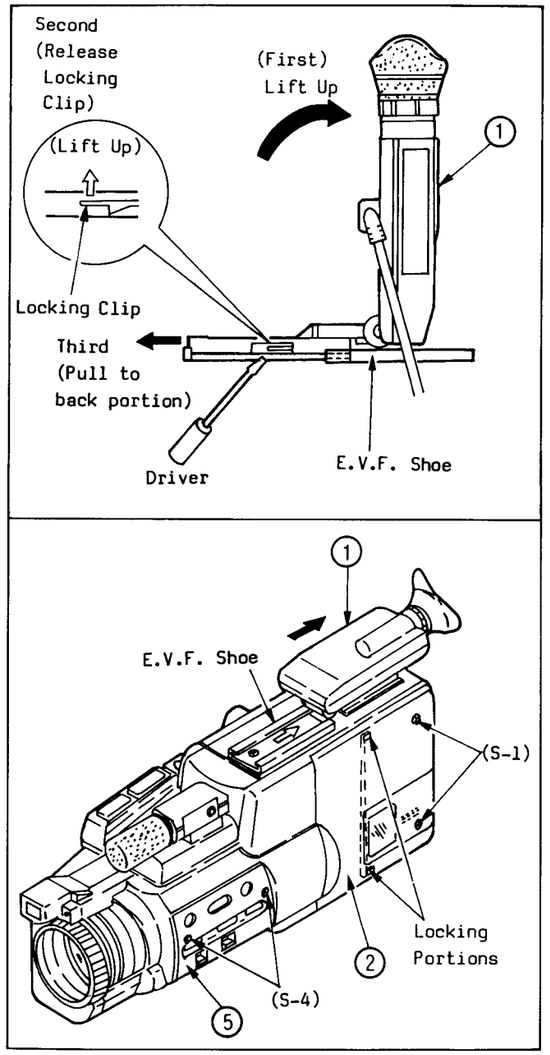

Fig. D2

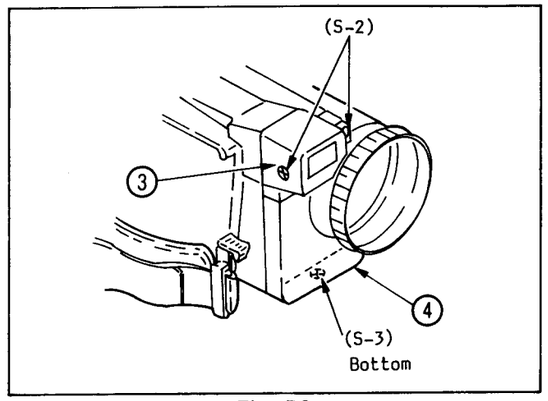

Fig. D3

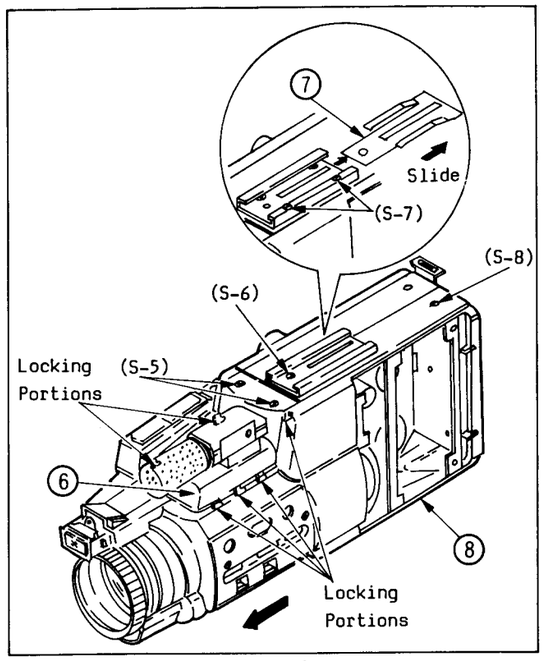

Fig. D4

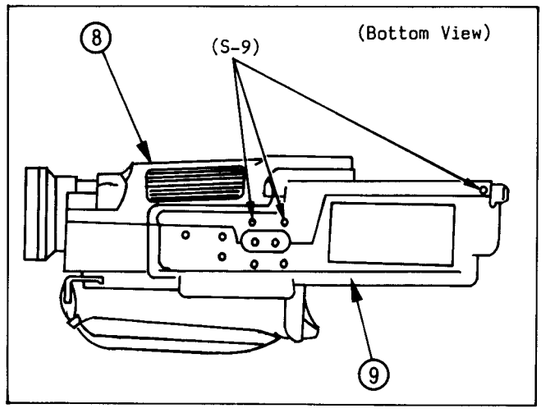

Fig. D5

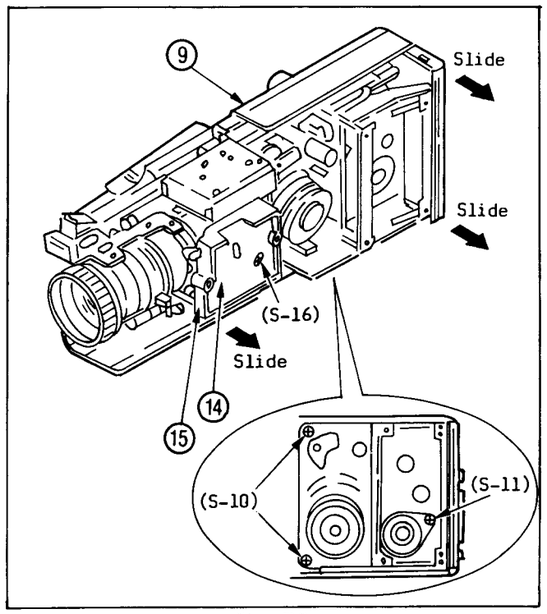

Fig. D6

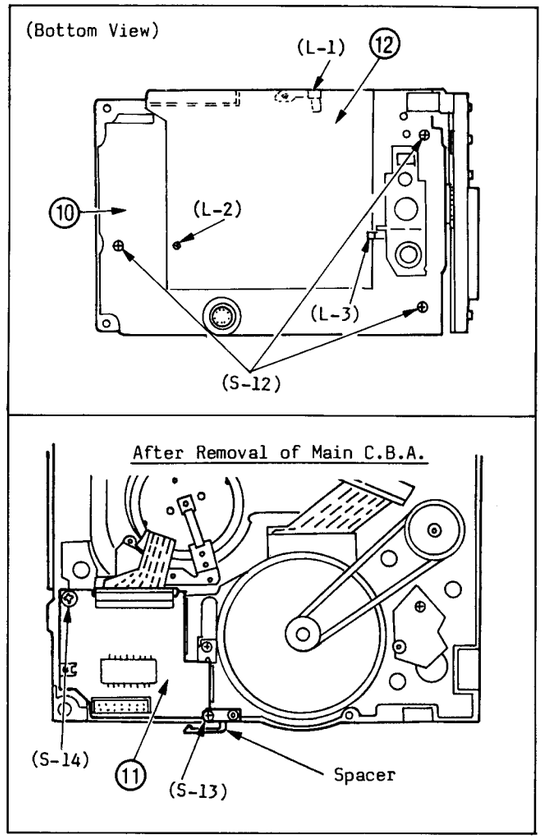

Fig. D7

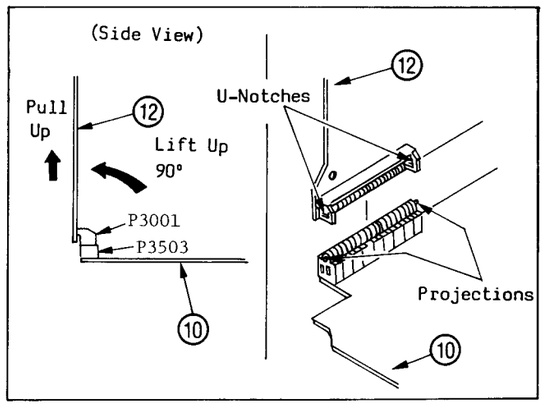

Fig. D8

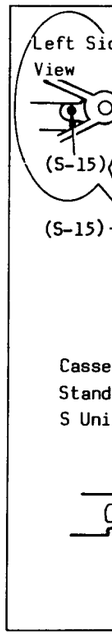

Reference
1. In
rear
2. Slid
remo
3. Afte
Shoe
4. Whe
Amp
from
5. (Rem
1)
2)
6. 1)
2)
7. 1)

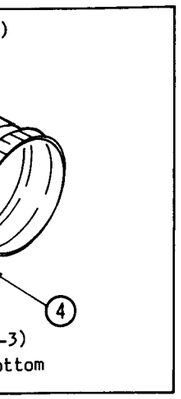

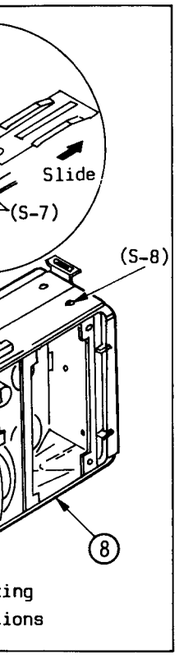

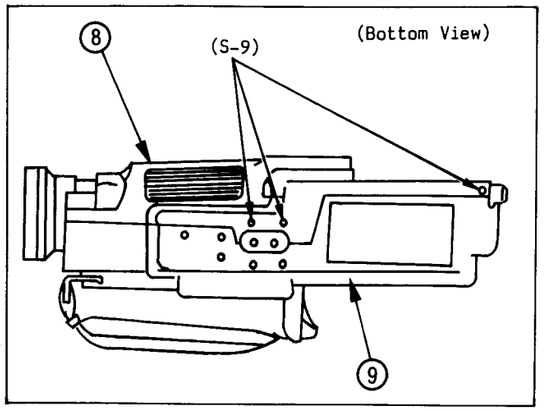

Fig. D5

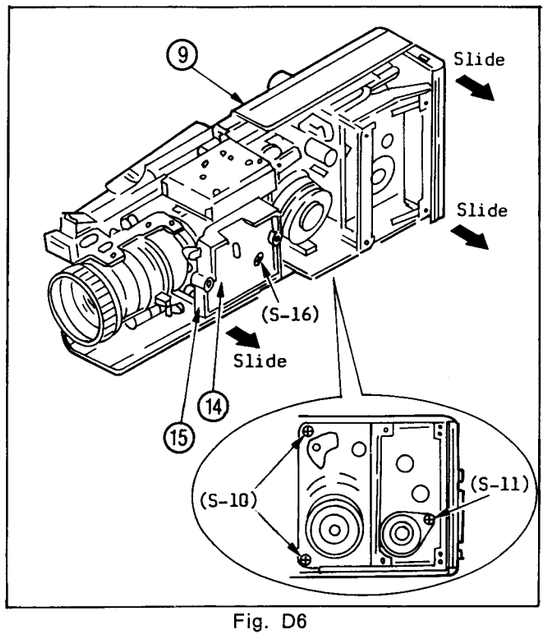

Fig. D6

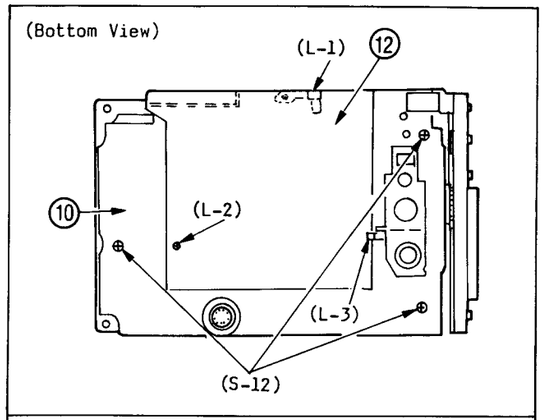

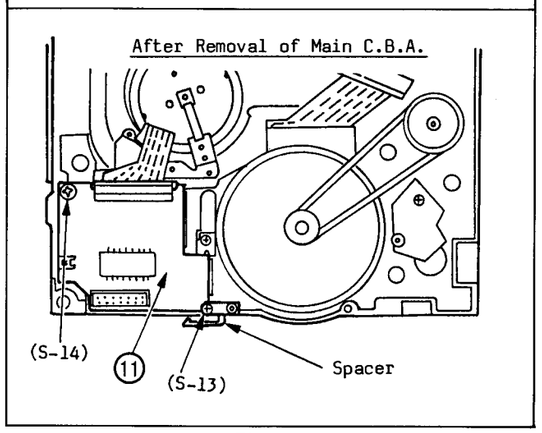

Fig. D7

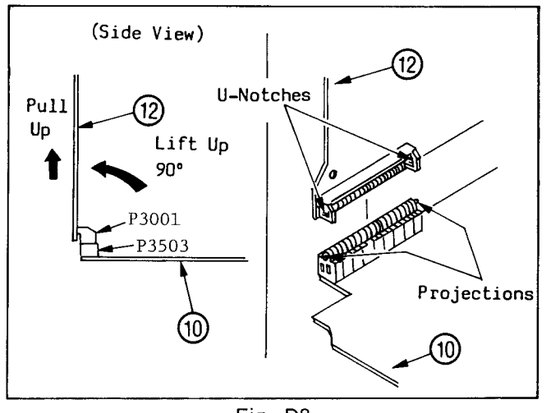

Fig. D8

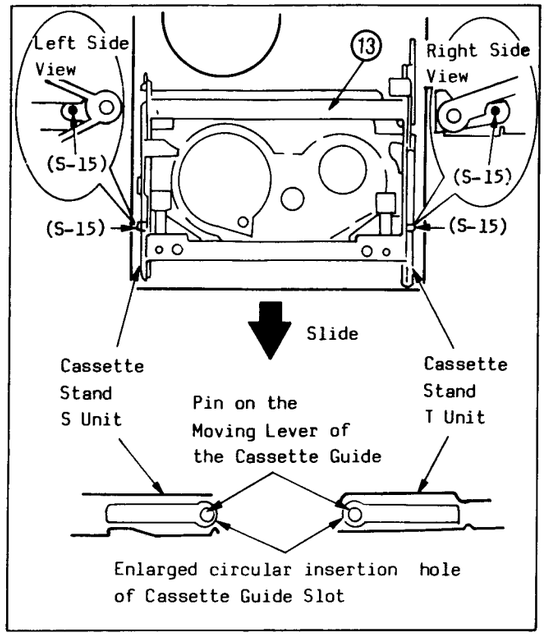

Fig. D9

Reference <Notes> in Table 2-1:

1. In Fig. D2, slide the E.V.F. Unit to the rear as shown by the arrow.
2. Slide the top Case to the front portion to remove as shown by the arrow.
3. After removing Screw (S-6), slide the E.V.F. Shoe Spring to the rear as shown in Fig. D4.
4. When opening the Main C.B.A., hold the Head Amp I Ass'y downward to prevent the P.C.B. from cracking and the screw from loosening.
5. (Removal of Luminance/Chrominance C.B.A.)
   1) Release 2 Locking Tabs (L-2) and (L-3) in Fig. D7. And place the Luminance/Chrominance C.B.A. as shown in Fig. D8.
   2) Pull Luminance/Chrominance C.B.A. in the direction indicated by the arrow.
   *Do not pull Luminance/Chrominance C.B.A. when C.B.A.'s are not placed horizontally.
6. 1) The 2 Screws (S-15) are located on the side of the Cassette Up Unit.
   2) Slide the Cassette Up Unit in direction of arrow and release the pins on the moving Levers of the Cassette Up Unit from the enlarged circular insertion hole at end of the Cassette Guide slot.
7. 1) When removing Camera Operation Bracket, slide carefully in the direction shown by the arrow in Fig. D6.

2-1-3. CAMERA SECTION 1

Step /Loc No.	Part	REMOVAL		
		Fig. No.	Remove *UNLOCK/RELEASE/ UNPLUG/UNCLAMP /UNSOLDER	Note
①	Camera Unit	D10, D11	2(S-1), * P304	
②	Process C.B.A.	D11, D13, D14	3(S-2), 2(S-5), Connectors *BA305,*BA301	
③	AF C.B.A.	D12, D14	3(S-3) Connectors *P601, *P602, *P603, *P604	
④	CCD Drive C.B.A.	D13, D15	4(S-4), Sensor Shield Case 2(S-7), Connector *FP201	
⑤	Actuator Ass'y	D13, D16	3(S-6), Sensor Frame(1) 3(S-8)	
⑥	CCD Ass'y	D17	2(S-9)	1

List of Abbreviations:
2(S-1) = 2 Screws (S-1)

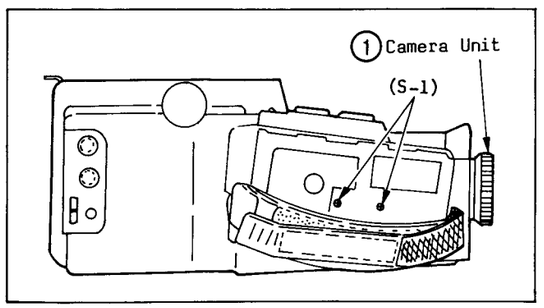

Fig. D10

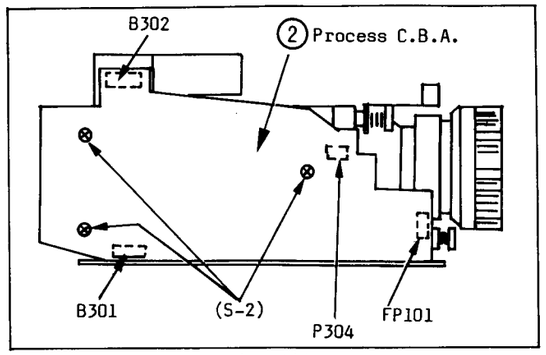

Fig. D11

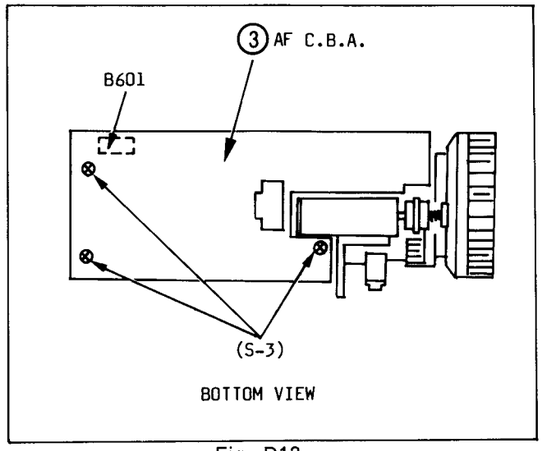

Fig. D12

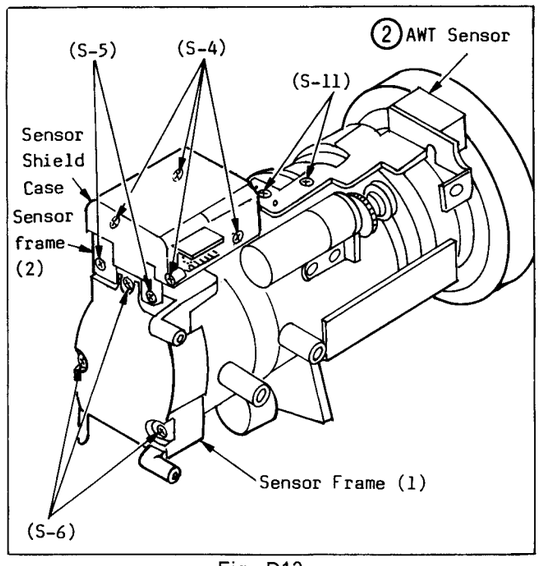

Fig. D13

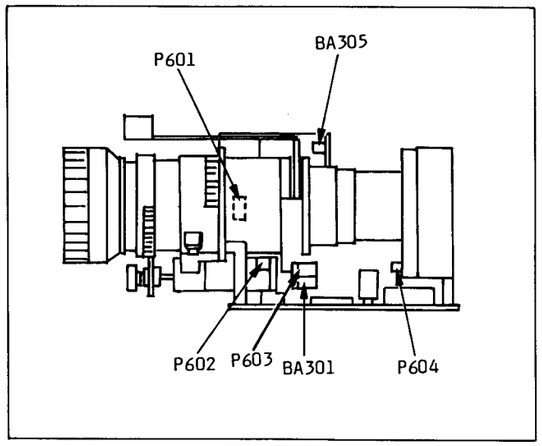

Fig. D14

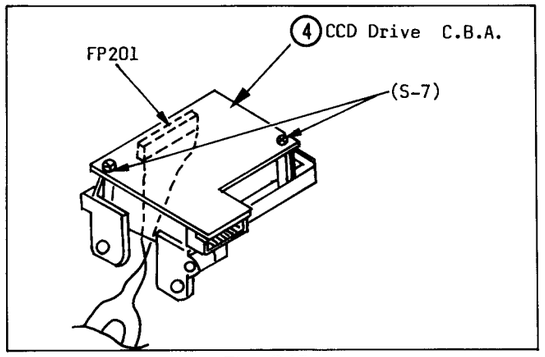

Fig. D15

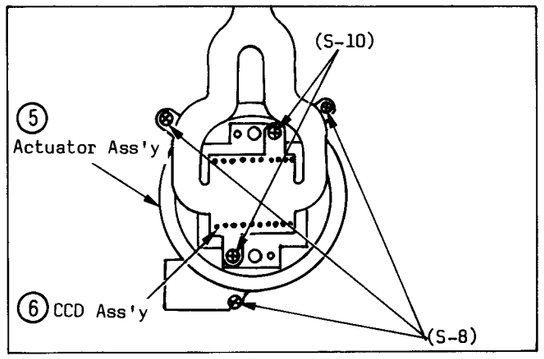

Fig. D16

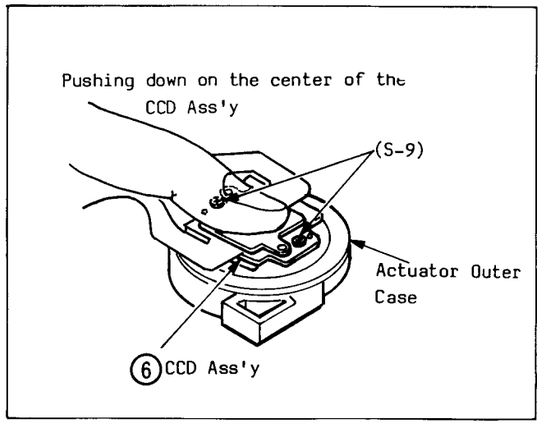

Fig. D17

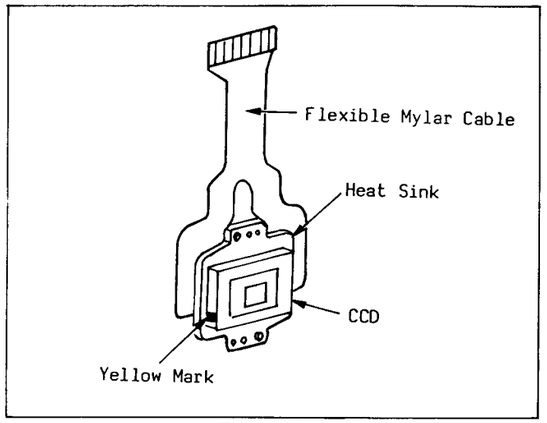

Fig. D18

Reference's <Notes> in Table 2-2:
(1-1) Put the CCD Ass'y and the Actuator Ass'y on the worktable.
(1-2) Do not touch the CCD window surface.
(1-3) Do not touch the Actuator Outer Case during removal or installation of the CCD Ass'y.

Installation of CCD Ass'y

To complete the reassembly, reverse the previous disassembly steps.

Parts to be replaced related to the CCD Ass'y

The CCD Ass'y, Heat Sink and Flexible Mylar Cable are available. The CCD by itself is not available because it is a part of the CCD Ass'y.

(1-1) If the CCD is damaged, replace its Ass'y with a new CCD Ass'y.
(1-2) If the Flexible Mylar Cable or the Heat Sink is damaged, but the CCD is normal, replace the damaged part with a new part. Carefully resolder the lead pins on the CCD. Retighten 2 Screws (S-9) while positioning the CCD in the center of its movable range on Heat Sink.

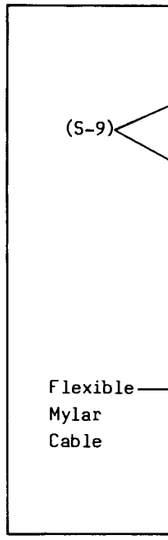

(1) Do not appl
or resolderin
(2) After rea
reinstall it i
(3) Position th
picture on t
(4) Check that
horizontal.
(5) If it is not,

Note:
There is a Y
Mylar Cable
cable is locat

[Example]
If the pictu
loosen 2 Scr
D19-2, turn
the picture's
(S-10).

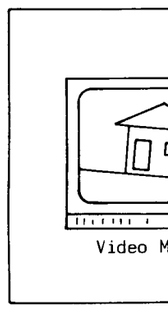

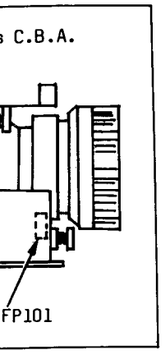

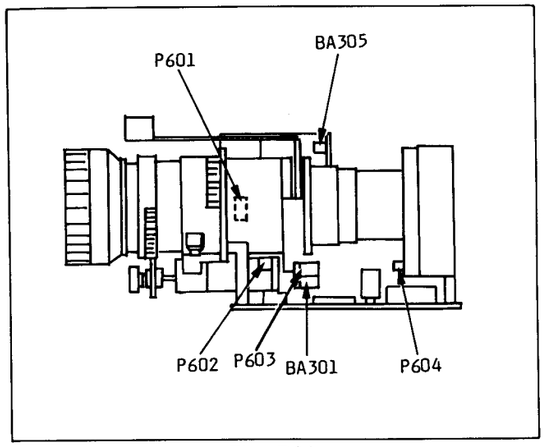

Fig. D14

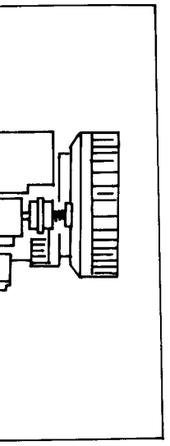

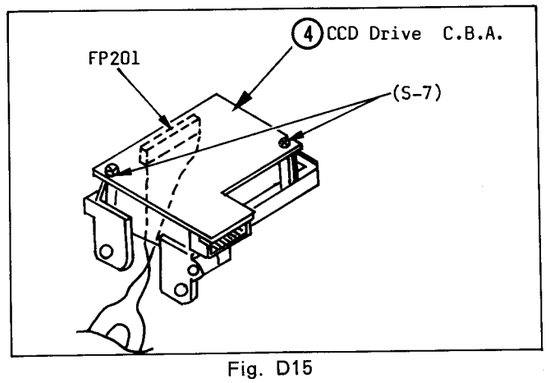

Fig. D15

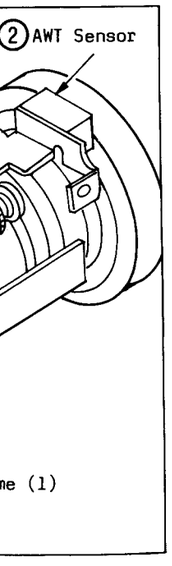

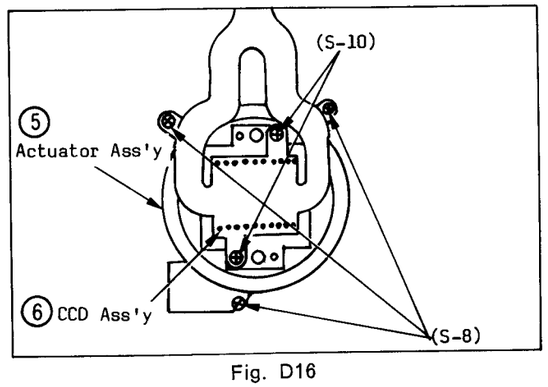

Fig. D16

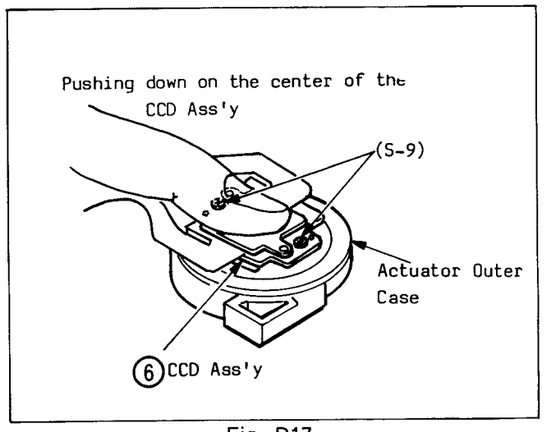

Fig. D17

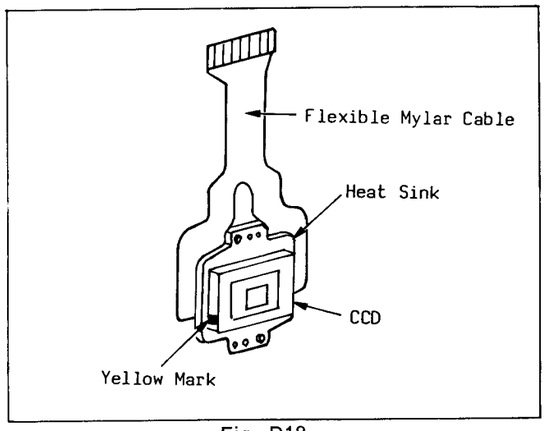

Fig. D18

Reference's <Notes> in Table 2–2:
(1–1) Put the CCD Ass'y and the Actuator Ass'y on the worktable.
(1–2) Do not touch the CCD window surface.
(1–3) Do not touch the Actuator Outer Case during removal or installation of the CCD Ass'y.

Installation of CCD Ass'y

To complete the reassembly, reverse the previous disassembly steps.

Parts to be replaced related to the CCD Ass'y

The CCD Ass'y, Heat Sink and Flexible Mylar Cable are available. The CCD by itself is not available because it is a part of the CCD Ass'y.

(1–1) If the CCD is damaged, replace its Ass'y with a new CCD Ass'y.
(1–2) If the Flexible Mylar Cable or the Heat Sink is damaged, but the CCD is normal, replace the damaged part with a new part. Carefully resolder the lead pins on the CCD. Retighten 2 Screws (S–9) while positioning the CCD in the center of its movable range on Heat Sink.

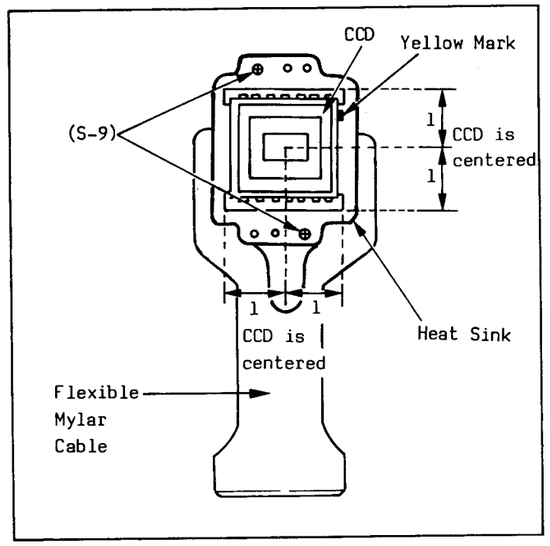

Fig. D19–1

(1) Do not apply heat to the CCD when unsoldering or resoldering.
(2) After reassembly of the CCD Assembly, reinstall it in the repaired camera.
(3) Position the camera horizontally and project a picture on the Video Monitor.
(4) Check that the picture on the Video Monitor is horizontal.
(5) If it is not, repeat steps 1–2.

Note:
There is a Yellow Mark on the CCD. The Flexible Mylar Cable should be installed so that the cable is located on that side.

[Example]
If the picture is tilted down to the right, loosen 2 Screws (S–10), refer to Fig. D16 and D19–2, turn the CCD counterclockwise to correct the picture's tilt and then retighten 2 Screws (S–10).

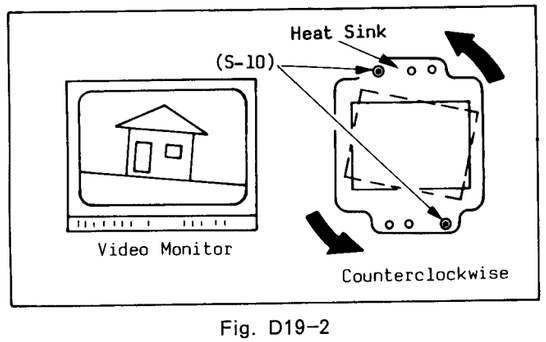

Fig. D19–2

Note:
(1) After replacement of the CCD, readjust the following controls.

A. BACK FOCUS ADJUSTMENT
B. CCD OUTPUT ADJUSTMENT
C. BLOOMING (SMEARING) ADJUSTMENT
D. AUTO IRIS ADJUSTMENT
E. AGC ADJUSTMENT
F. PEDESTAL LEVEL ADJUSTMENT
G. YH LEVEL ADJUSTMENT
H. CARRIER BALANCE AND BLACK PEDESTAL ADJUSTMENT
I. WHITE BALANCE ADJUSTMENT
J. COLOR PHASE AND R–Y/B–Y GAIN ADJUSTMENT
K. HIGH INTENSITY SUPPRESS ADJUSTMENT
L. AUTO WHITE BALANCE MODE ADJUSTMENT
M. LOW LIGHT INDICATION ADJUSTMENT
N. AWT MODE ADJUSTMENT
O. H–OSC ADJUSTMENT
P. FOCUS ADJUSTMENT
Q. CENTERING ADJUSTMENT
R. V. SIZE ADJUSTMENT
S. BRIGHTNESS ADJUSTMENT
T. AF GATE ADJUSTMENT
U. F VALUE BIAS GAIN ADJUSTMENT
V. AF VH FREQUENCY ADJUSTMENT

(2) Before reinstalling, clean the IR Cut Filter with Lens Cleaning Materials. If the Crystal Filter Plate is removed from the front of the CCD Assembly, replace it with the IR Cut Section (Blue portion) positioned toward the CCD Ass'y. Ensure that the Filter Rubber is mounted on Item 22 before installation of Item 22.

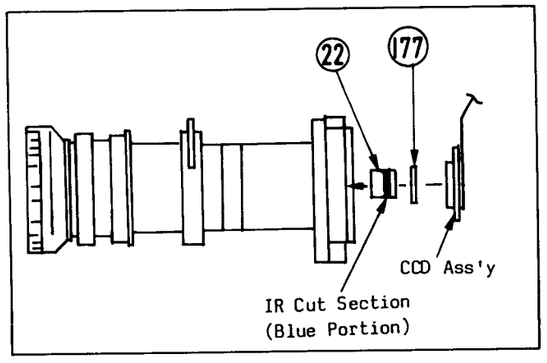

Fig. D20

2-1-4. CAMERA SECTION 2

Step /Loc No.	Part	REMOVAL		
		Fig. No.	Remove *UNLOCK/RELEASE/ UNPLUG/UNCLAMP	Note
①	Zoom Motor/ AF Motor	D21	4(S-1)	
②	AWT Sensor	D13	2(S-11)	
③	IRIS Motor Unit	D22	(S-2)	

List of Abbreviations:
4(S-1) = 4 Screws (S-1)

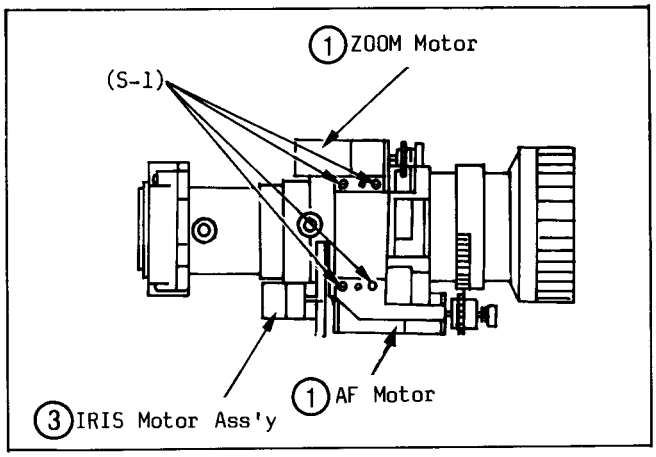

Fig. D21

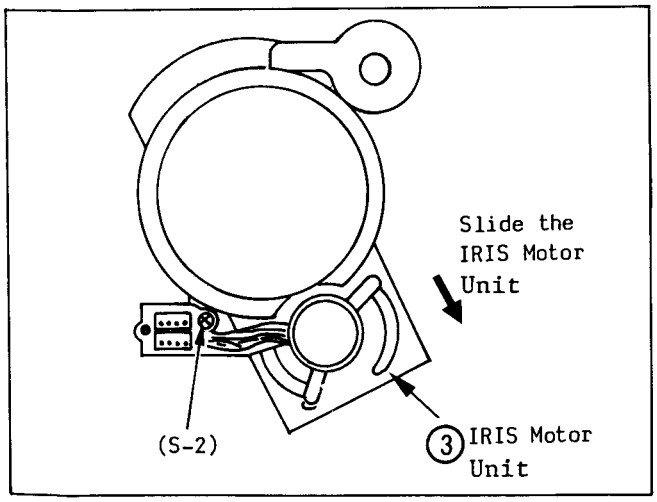

Fig. D22

2-1-5. E.V.F. SECTION

Step /Loc No.	Part	REMOVAL		
		Fig. No.	Remove *UNLOCK/RELEASE/ UNPLUG/UNCLAMP	Note
①	Bottom Case	D23	2(S-1), (S-2) Cable Holder	
②	CRT Ass'y	D24	----------	
③	DY Ass'y	D25	CRT Socket	

List of Abbreviations:
2(S-1) = 2 Screws (S-1)

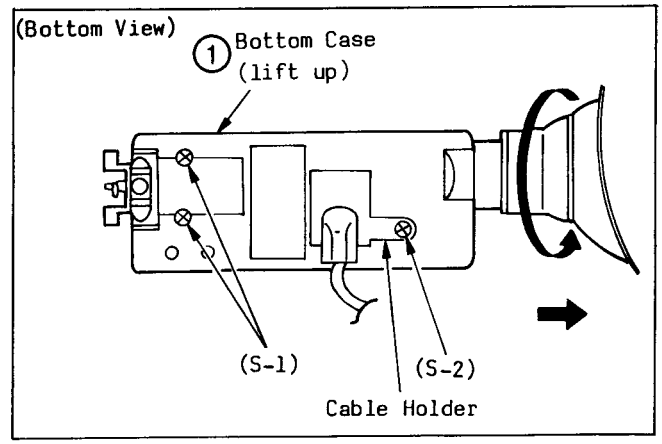

Fig. D23

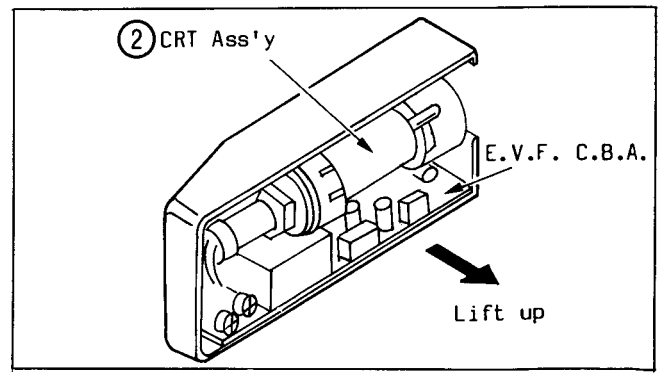

Fig. D24

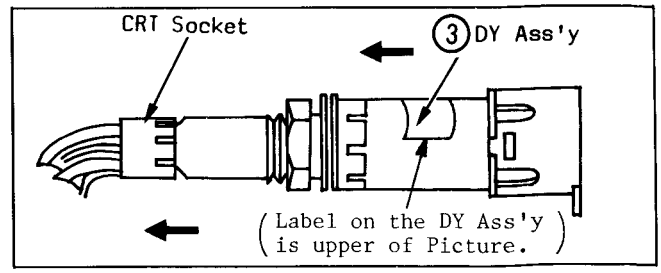

Fig. D25

2-2. PROCEDURE FOR CLEANING UPPER CYLINDER UNIT

(1) Position the Video Head to permit access for cleaning, and hold the Upper Cylinder to keep it from turning while cleaning.
(2) Gently rub the Video Head in the direction of tape travel with a Head Cleaning Stick (VFK27) moistened with Freon TF.
(3) Repeat for the other Video Heads.

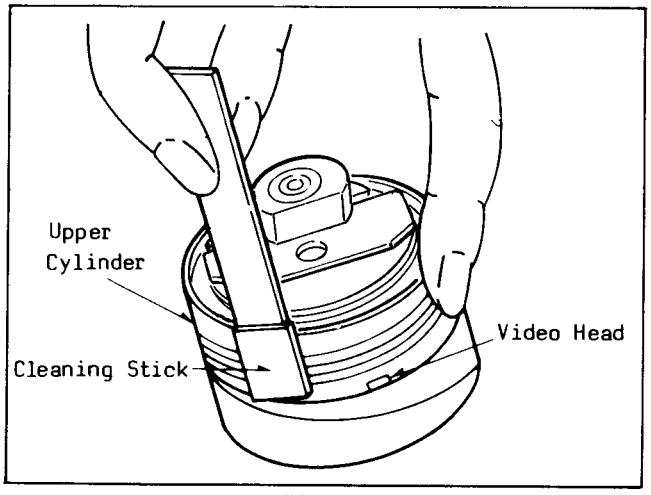

Fig. U1

Note:
(1) Do not rub vertically.
(2) Do not apply any pressure to the head. If the contaminant is not easily removed, continued gentle wiping will usually remove it.

2-3. REPLACEMENT AND ADJUSTMENT PROCEDURES

2-3-1. REPLACEMENT OF UPPER CYLINDER UNIT

* Work with extreme care when removing or replacing the Upper Cylinder Unit.
* Do not touch Video Heads and Flying Erase Head.

Removal of Upper Rotary Transformar (S) Unit

(1) Remove 2 screws (A) and Upper Rotary Transformar (S) Unit.

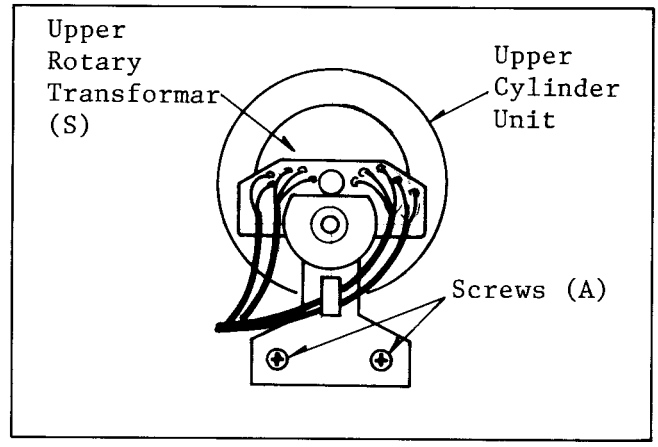

Fig. M1

Removal of Rotaly Transformar (R) Unit

(1) Unsolder 8 Lead Pins (B).
(2) Remove 2 screws (C).
(3) Remove Rotary Transformar (R) Unit.

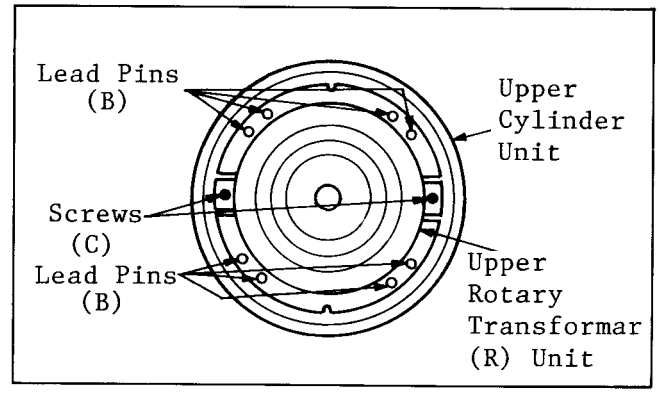

Fig. M2

Removal of Upper Cylinder Unit

(1) Unsolder 10 Lead Pins (D).
(2) Remove 2 screws (E) and gently lift the Upper Cylinder Unit from the Shaft.

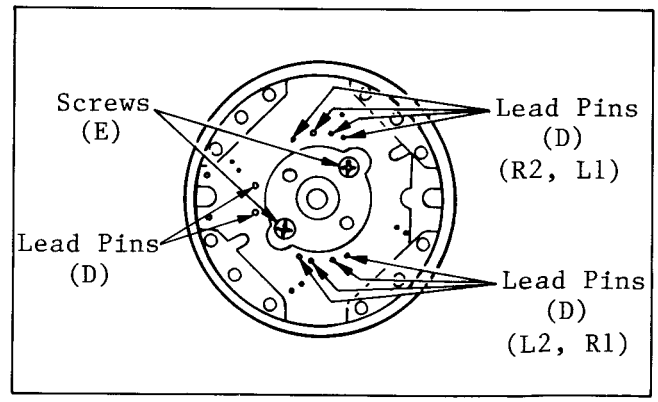

Fig. M3

Cleaning of D.D. Cylinder Shaft and the surface

(1) Before reinstalling a new unit, clean the D.D. Cylinder Shaft and the surface that engages with the Upper Cylinder, with a soft cloth dampened with Freon TF in Fig. M4.

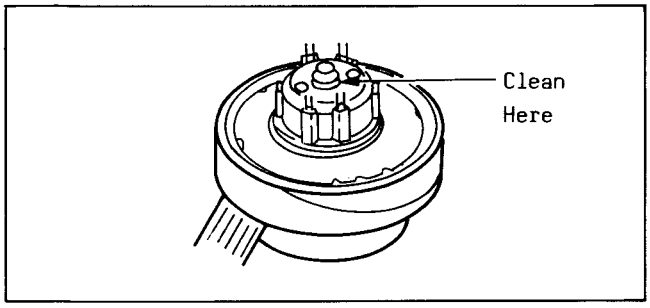

Fig. M4

Replacement of Upper Cylinder Unit

(1) Install the new Upper Cylinder Unit carefully so that the white portion of D.D. Cylinder Unit is properly aligned with white portion of Upper Cylinder Unit. For details on the installation position, refer to Fig. M5.
(2) Tighten the 2 screws (E) and solder 10 Lead Pins (D).

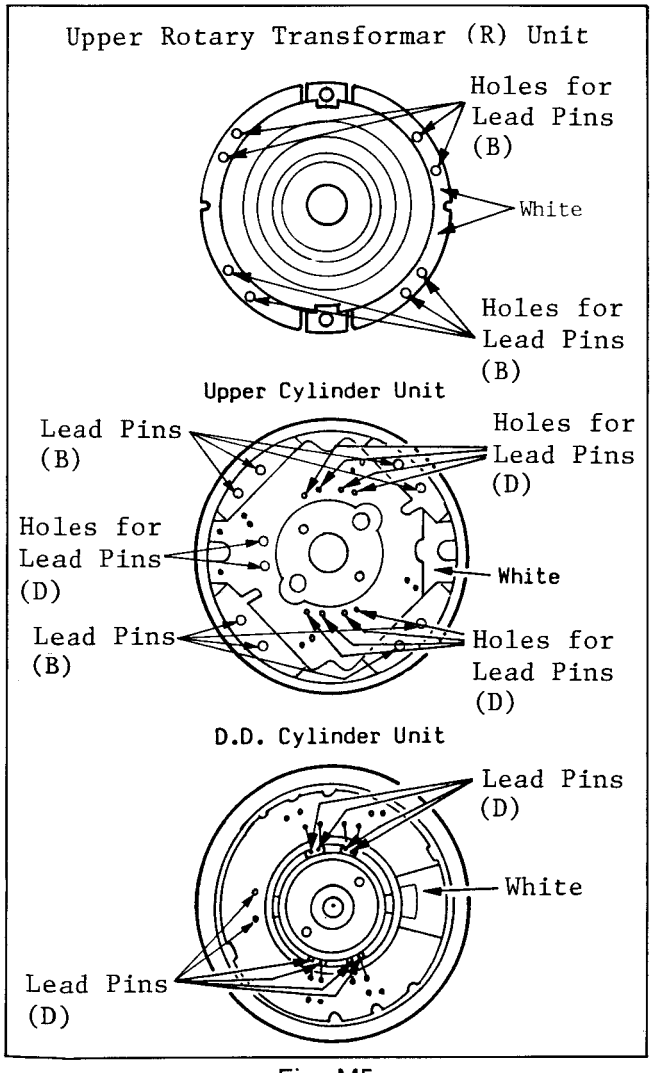

Fig. M5

Reinstallation of Rotary Transformar (R) Unit

(1) Reistall the Rotary Transformar (R) Unit carefully so that the white portion of Upper Cylinder Unit is properly aligned with white portion of Rotary Transformar (R).

(2) Tighten the 2 screws (C) and solder 8 Lead Pins (B).

Reinstallation of Upper Rotary Transformar (S) Unit

(1) Befor reinstalling a Upper Rotary Transformar (S) Unit, clean the surface of Rotary transformar (R) and Rotary Transformar (S) with a soft cloth.
(2) Place the Spacer (Supply with Upper Cylinder Unit) on Rotary Transformar (R). Reinstall the Upper Rotary Transformar (S) Unit so that insert the shaft (Supply with Upper Cylinder Unit) to center of Rotary transformar (S) surely through the center of Upper Rotary transformar (R).

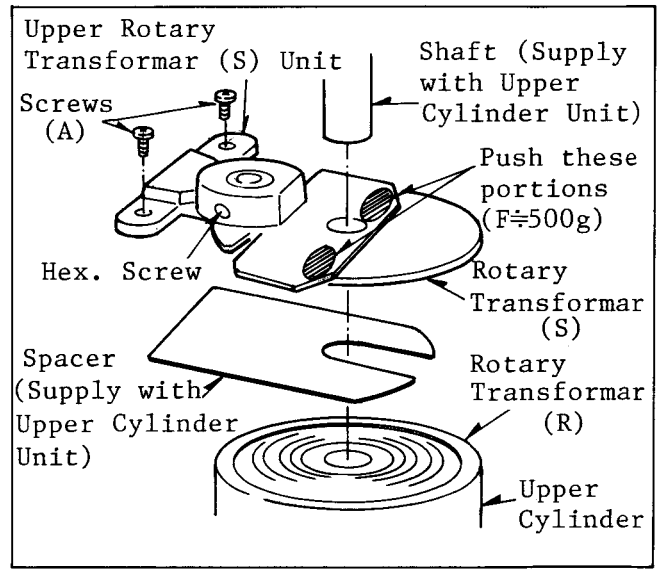

Fig. M6

(3) Tighth the 2 screws (A).
(4) Loosen the Hex. Screw (1.2mm).
(5) Push the Upper Rotary Transformar (S) C.B. (F=500g) and then remove the Shaft and tightn the Hex. Screw.
(6) Remove the spacer.

Confirmation of replacement

(1) Confirm the rotarion of Upper Cylinder Unit. (Upper Cylinder Unit rotate smoothly.)
(2) Insert the Spacer to gap of Rotaly Trans. (It must be smoothly also gap must not be too wide.)
(3) Confirm the selfrecording and Playback picture on LP mode. (Play back picture must not noisy)
(4) If condition is no good, review the item No.6 Reinstllation of Upper Rotary Transformar (S) Unit.
(5) After confirmation, perform "TAPE INTERCHANGEABILITY ADJUSTMENT."

2-3-2. REPLACEMENT OF CYLINDER UNIT

Work with extreme care when removing or replacing the D.D. Cylinder Unit. Do not touch Video Heads during servicing.

(1) Remove the Upper Rotary Transformar (S) Unit.
(2) Unlock Flexible Cables P13 on the Head Amp I Ass'y. and P15 on the Capstan/Cylinder Motor Drive C.B.A.
(3) Remove Screw (A) and the Grounding Plate.
(4) Remove 3 Screws (B) and then lift the D.D. Cylinder Unit slowly from the top side.

Note:
(1) Do not pull on the flexible cables coming from the D.D. Cylinder Unit.
(2) Since there is very little clearance between D.D. Cylinder Unit and Chassis, remove the D.D. Cylinder Unit gently and carefully.

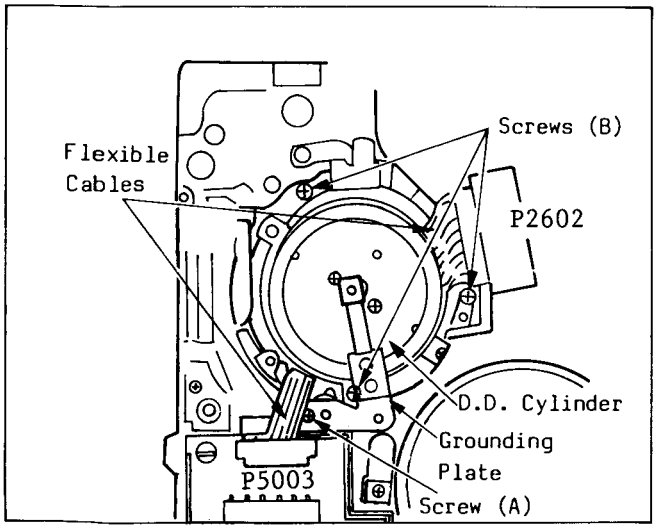

Fig. M7

(5) Reinstall the Upper Rotary Transformar (S) Unit, refer to the Replacement of Upper Cylinder Unit.
(6) Reinstall the new D.D. Cylinder Unit on the chassis by reversing the procedure described above.

Note:
(1) Upon completion of replacement procedure, confirm performance. If any further maintenance is required, perform "TAPE INTERCHANGEABILITY" with the Alignment Tape (VFM8180H8PF).

2-3-3. REPLACEMENT OF CAPSTAN MOTOR UNIT

(1) Ensure Unit is in the STOP mode. Remove the Capstan Belt.
(2) Unlock Flexible Cable P2603 on the Capstan/Cylinder Motor Drive C.B.A.

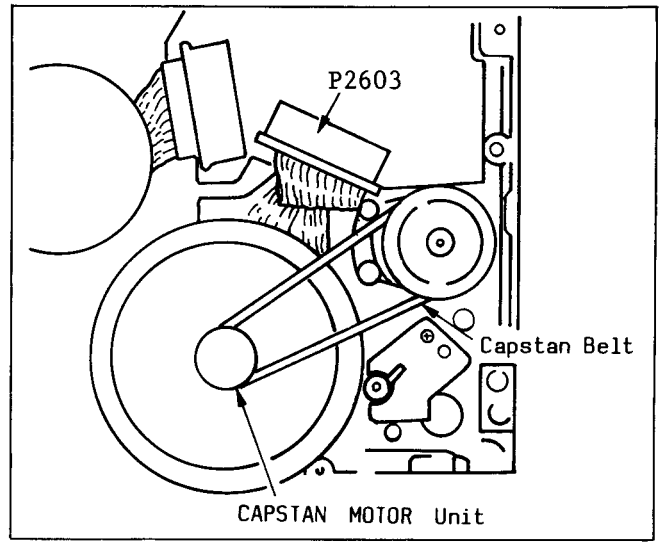

Fig. M8

(3) Remove the Cassette Up Holder. LP Head Amp, Head Amp Holder and Mode Select Switch Unit.
(4) Take out the Idler Gear while pushing on the Tape Guide Lever Unit until it clears the Idler Gear Teeth as shown in Fig. M9.

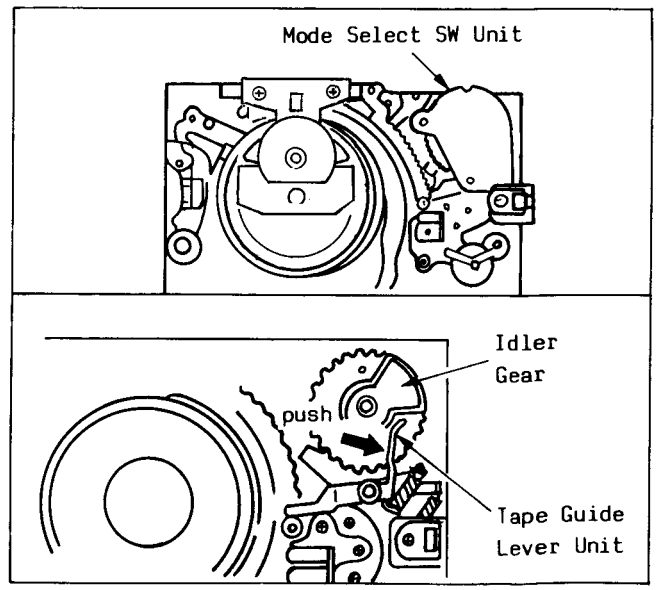

Fig. M9

(5) Remove 2 Screws (B). Then remove Screw (C) while slightly pushing on the Sector Gear Unit to reveal Screw (C) as shown in Fig. M10. Then remove the A/C Head Base Unit.

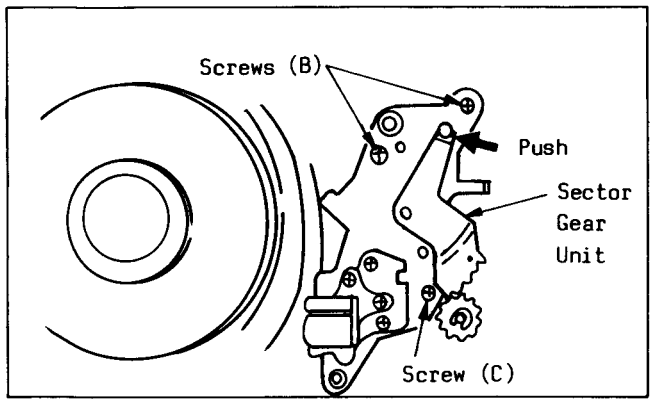

Fig. M10

(6) Remove the Cut Washer and Motor Gear. Then place the Unit in play position completely by rotating Loading Idle Gear clockwise as shown in Fig. M11.

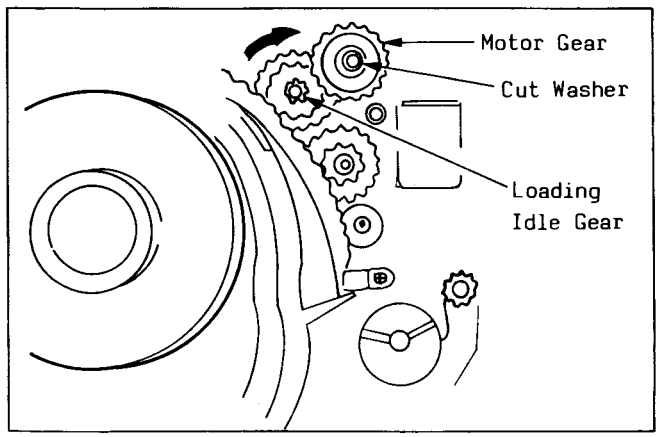

Fig. M11

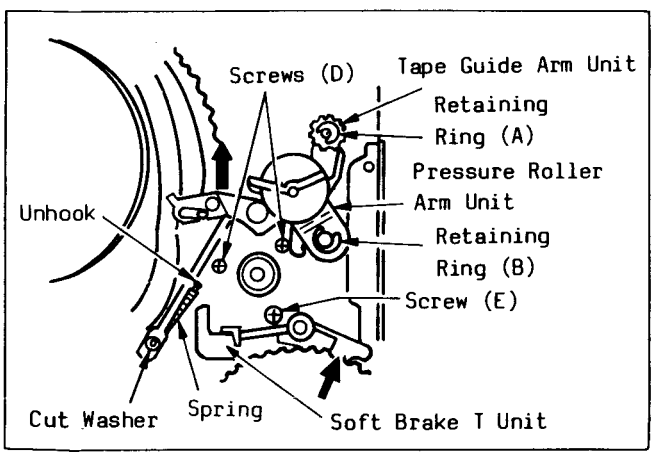

Fig. M12

(7) Remove Retaining Ring (A) and Tape Guide Arm Unit by pushing it in the direction shown by arrow and lifting it off its Post.
(8) Remove the Cut Washer and unhook the Spring.
(9) Remove Retaining Ring (B) and Pressure Roller Arm Unit.
(10) Refer to the Disassembly/Assembly and Adjustment Procedures of Mechanism on page 2-2-16. Use steps 3, 4 and 5 to remove the Takeup Reel Gear, Clutch Gear Unit and Soft Brake T Unit.
(11) Remove 2 Screws (D) and Screw (E) while pushing slightly on the Soft Brake T Unit.Then remove the Capstan Stator Unit from Bottom Side.
(12) Replace the new Capstan Motor Unit and then tighten 2 Screws (D) and Screw (E).

Adjustment of FG Head Gap

* Specification: ..... 0.1~0.15mm
(1) Slightly loosen the 2 screws.
(2) Put the paper which is used for cover page of this volume into the gap between F.G.Head and Capstan rotor.
(3) Afer adjustment, tighten 2 screws.

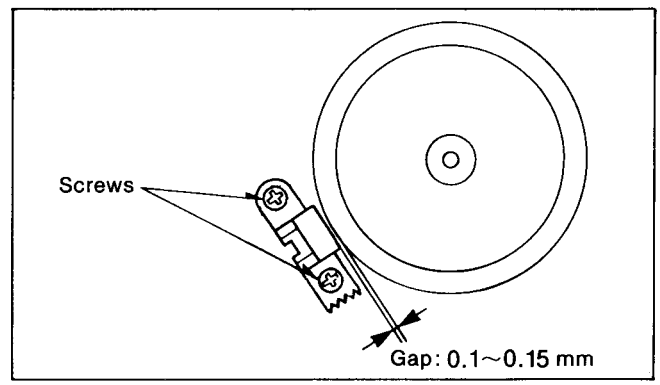

Fig. M12-1

Note:
Do not touch the surface of rotor and keep any magnetizable material away.

2-3-4. ADJUSTMENT OF TENSION POST POSITION

(1) Remove the Cassette Up Unit.
(2) Cover the Tape End Sensor and Cassette Up/Down Sensor with Black Tape.
(3) Push the Play button to complete loading operation sequence.
(4) As soon as loading is completed, disconnect the AC plug of AC Adaptor.
(5) Loosen Screw (F) a little bit and adjust the Tension Adjust Piece (in either direction) as indicated by the arrow so that the center of the Tension Post is 1mm to the left of the center of the S1 Post as shown in Fig. M13. Tighten Screw (F) to secure it.

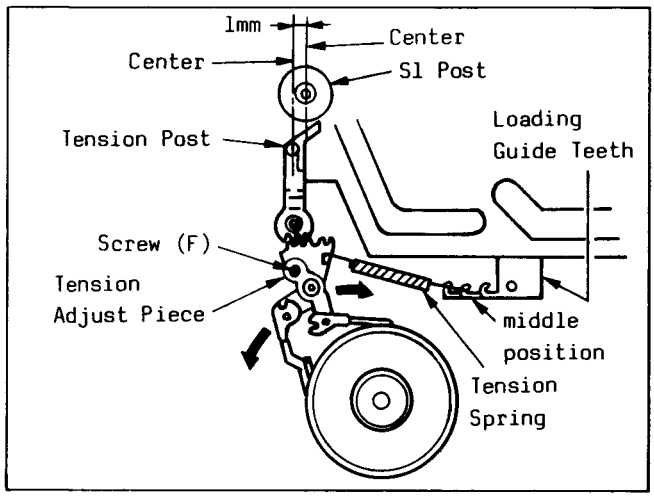

Fig. M13

Note:
After this adjustment, reposition Tension Spring on Loading Guide Teeth to middle position as a Back Tension Adjustment as shown in Fig. M13.

2-3-5. HEIGHT ADJUSTMENT OF TAPE GUIDE POSTS (PRELIMINARY ADJUSTMENT)

Height adjustment of S1 Post

* Specification: ..... 14.72+−0.1mm

(1) For adjustment of S1 post height, turn 4mm Nut (A) slightly in either direction as necessary to the correct clearance between the upper edge of the lower tape guide on S1 Post and the lower portion of Cassette Stand S Unit.

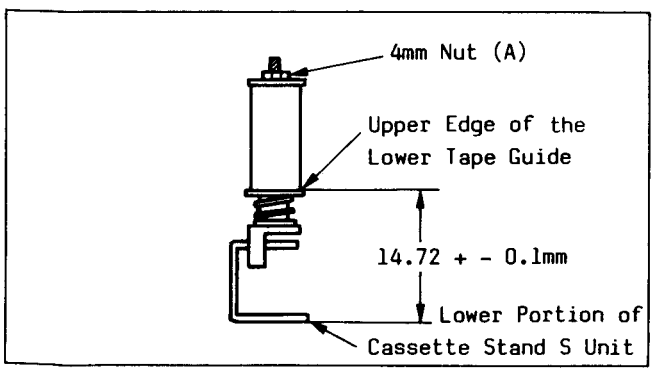

Fig. M14

Height adjustment of S2 and T1 Posts

* Specification:
S2 Post ..... 0.56+−0.1mm
T1 Post ..... 0.74+−0.1mm

(1) For adjustment of S2 and T1 post height, loosen the Black Lock Screw located on the lower portion of Posts (S2 & T1) using the Lock Screwdriver .
(2) Turn top of post with Hex. Wrench (1.5mm) slightly in either direction as necessary to the correct clearance as shown in Fig. M15.

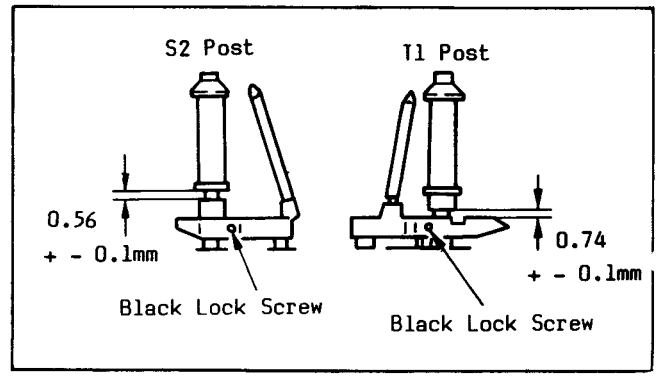

Fig. M15

2-3-6. TAPE INTERCHANGEABILITY ADJUSTMENT (FINAL ADJUSTMENT)

Note:
1) To perform these adjustment/confirmation procedures, make sure that the Tracking Control is set in the fixed (neutral) positionby pushing both of the Tracking Control Up/Down Switches, on the Main C.B.A., in at the same time.
2) Before these adjustment/confirmation procedures, remove the cassette protective Tape Cover from a Cassette Tape or the Alignment Tape (VFM8180H8PF).

* Equipment Required:
Dual Trace Oscilloscope
Alignment Tape ..... (VFM8180H8PF)
Hex. Wrench (1.5mm)

1. Confirmation of Tape Travel

(1) Play back a cassette tape and confirm that the tape travels without curling at the upper and lower guides on Posts S2 and T1.

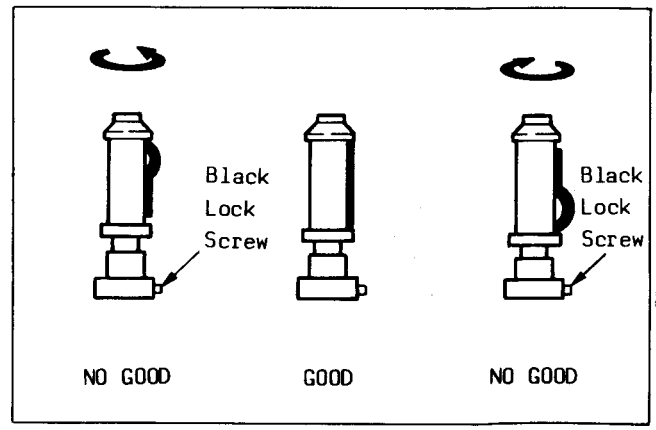

Fig. M16

(2) If curling is apparent, adjust the height of posts by turning the top of Post with Hex. Wrench. (for S2 and T1)

Note:
Before turning S2 and T1, slightly loosen the Black Lock Screw using the Lock Screwdriver.

2. Confirmation of A/C Head

This confirmation is required when the A/C Head or Capstan Motor is replaced and for a preliminary height adjustment.
For final adjustment, perform items 6–3 and 6–4.

(1) Looking at the lower edge of the Control Head with the tape in motion, ensure that the lower edge of the tape runs 0.25mm above the lower edge of the Control Head. If it doesn't, turn Black Screw (A) slightly in either direction as necessary to correct it. Turn clockwise to lower the head and counterclockwise to raise it.

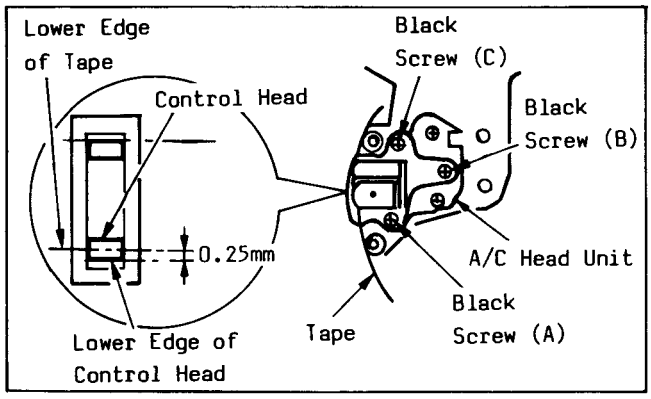

Fig. M17

3. Confirmation of Tilt of A/C Head

(1) Play back a cassette tape and confirm that the tape runs properly between lower and upper limits of T3 Post. Also confirm that the tape is running smoothly.
(2) If adjustment is required, turn Black Screw (B), in Fig. M17, counterclockwise until curling is apparent at lower edge of T3 Post. Then turn Black Screw (B) clockwise until the curling smoothes out.

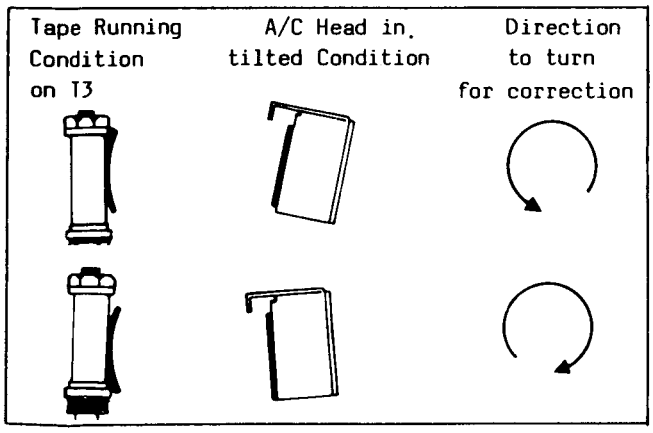

Fig. M18

4. Height and Azimuth Adjustment of A/C Head

(1) Connect the oscilloscope to TP4001 on the Main C.B.A.
(2) Play back the Monoscope portion (6KHz, Mono) of the Alignment Tape.
(3) Adjust Black Screw (C) on the A/C Head Base in Fig. M17 so that the output level is at a maximum.

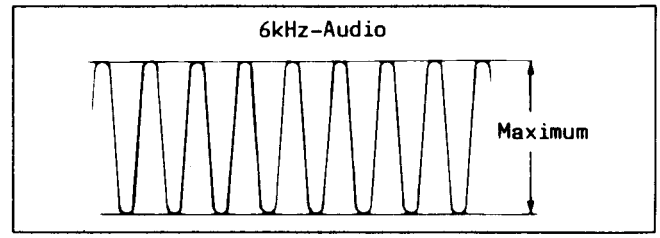

Fig. M19

(4) Readjust Black Screw (A) shown in Fig. M17 for maximum output.
(5) Disconnect the oscilloscope.

5. Horizontal Position Adjustment of A/C Head

(1) Set the tracking control to the fixed (neutral) position by pushing both of the tracking control Up/Down Switches, on the Main C.B.A., in at the same time. Connect the oscilloscope to TP3501 on the Main C.B.A. Use TP2001 as a trigger.
(2) Play back the monoscope portion of the Alignment Tape and confirm that RF envelope appears, as in Fig. M21.
(3) If adjustment is required, loosen 2 Black Screws (D) and then slowly move the A/C Haed Base back and forth using a screwdriver so that the envelope is at a maximum.

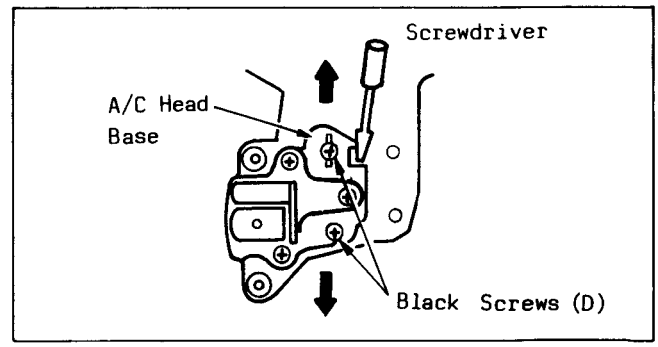

Fig. M20

(4) Confirmation of the correct adjustment can be made by alternately pushing the Tracking Control Up/Down Switches, on the Main C.B.A. to check the symmetry of the envelope.
(5) Trghten 2 Black Screws (D).
(6) Reconfirm the symmetry of the envelope. If it has changed, repeat steps 3–5.

6. Confirmation/Adjustment of Envelope Output

(1) Set the tracking control to the fixed (neutral) position by pushing both of the tracking control Up/Down Switches, on the Main C.B.A., in at the same time. Connect the oscilloscope to TP3501 on the Main C.B.A. Use TP2001 as a trigger.

(2) Playback the Monoscope portion of the Alignment Tape and adjust the height of posts S2 and T1 watching the scope display so that the envelope becomes as flat as possible.
(V1/V-max >= 0.7, V2/V-max >= 0.8)
If adjustment is required, turn top of post with Hex. Wrench (1.5mm). For adjustment of S2 and T1, refer to Item 6-1 and it's Note.

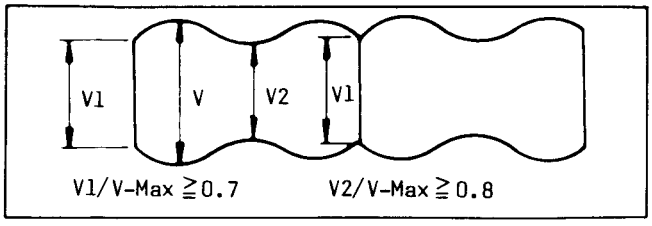

Fig. M21

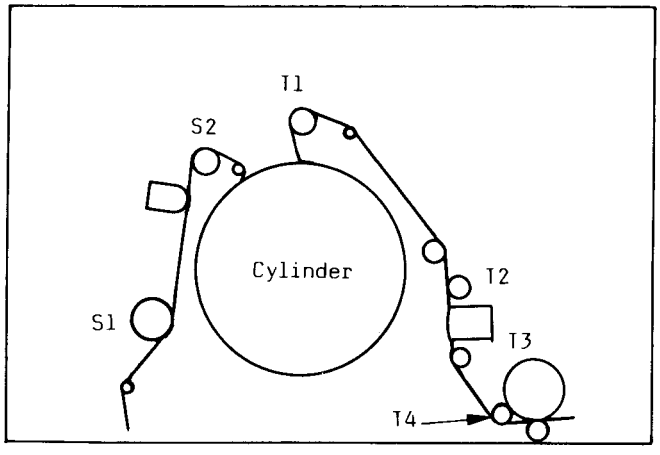

Fig. M22

(3) When the scope display is as shown in Fig. M23, adjust the height of S2 so that the waveform looks like Fig. M25.

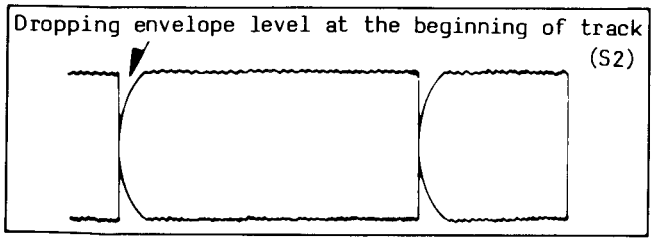

Fig. M23

(4) When the scope display is as shown in Fig. M24, adjust the height of T1 so that the waveform looks like Fig. M25.

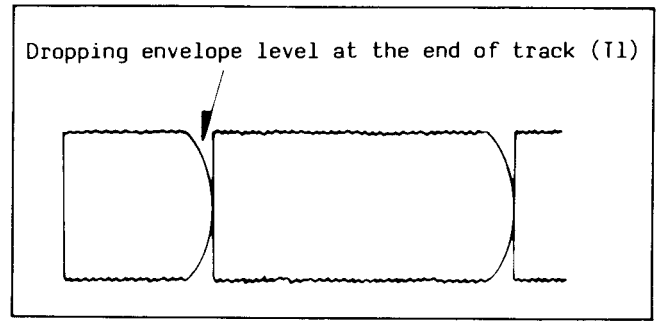

Fig. M24

(5) The scope display should appear as shown in Fig. M25 when S2 and T1 Posts are adjusted properly.

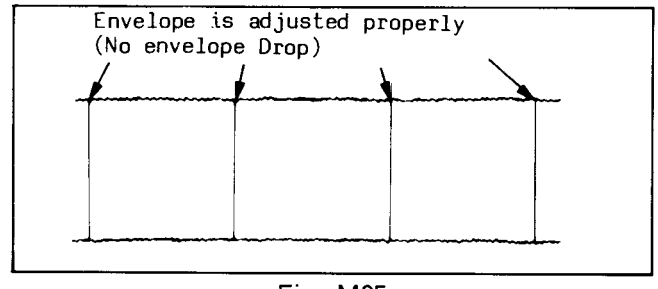

Fig. M25

Note:
1) Upon completion of adjustment of S2 and T1, tighten the Black Lock Screw on S2 and T1 using Lock Screwdriver. Then confirm the Horizontal Position of A/C Head by pushing the Tracking Control Up or Down switches on the Main C.B.A. alternately to check the symmetry of the envelope. And if required, perform "Horizontal Position Adjustment of A/C Head".
2) After these adjustment/confirmation procedures, replace the cassette protective Tape Cover.

2-3-7. ASSEMBLY AND ADJUSTMENT PROCEDURE OF MECHANISM

This procedure starts with the condition that the Cabinet parts and Cassette Up Unit have been removed.
When re-assembling, perform the step (s) in the reverse order.

STEP /LOC No.	START-ING No.	PART		REMOVAL Fig. No.	REMOVAL REMOVE * UNHOOK/UNLOCK/RELEASE	INSTALLATION ADJUSTMENT # CONDITION ∗ REMARKS
①	1	RT (S) UNIT D.D. CYL. UNIT	T/B	M27, 28	3 (S-0) * Connectors	* Remove the Earth Plate before Step ①
②	3	TAKEUP REEL GEAR	T	M26, 28	(C-1), (W-1) <Note 1>	(+)
③	3	CLUTCH GEAR UNIT	T	M26, 28	(C-2), (W-2) <Note 1>	(+)
④	4	SOFT BRAKE T UNIT	T	M26, 28	(C-3), * (P-1) <Note 1>	(+)
⑤	6	HEAD AMP ANGLE	T	M29	2 (S-2), (S-3) * Connector	* Remove the LP Head amp Unit before Step ⑤.
⑥	6	MODE SELECT SWITCH UNIT	T	M26, 29	(S-3) * Connector	Align the Punch Mark with the Notch. # STOP MODE
⑦	6	TAPE GUIDE LEVER UNIT	T	M26, 29	(C-4), * (P-2) <Note 1>	See, Hooking Position.
⑧	7	IDLER GEAR	T	M26, 30	----------	(+) Align the Notch with the Shaft of Loading Idle Gear. # STOP MODE
⑨	8	SECTOR GEAR UNIT	T	M26, 30	----------	(+) Align the Hole with the Notch. # STOP MODE
⑩	9	A/C HEAD BASE UNIT	T	M26, 30	3 (S-4)	<Note 2>
⑪	10	MOTOR GEAR	T	M26, 31	(C-5) <Note 1>	(+) # STOP MODE (Fig. M31)
⑫	11, 10	LOADING MOTOR UNIT	T	M31	2 (S-5)	<Note 2>
⑬	10	TAPE GUIDE LEVER UNIT	T	M26, 31	(R-1), * (P-3)	See, Hooking Position.
⑭	14	TENSION ARM UNIT	T	M26, 32	(C-6), (W-3) <Note 1>	(+) See, Adjustment of Tension Post Position.Align the Punch Mark with the Notch. #Loading
⑮	15	SUPPLY REEL TABLE UNIT	T	M26, 32	(C-7), (W-4) <Note 1>	(+)
⑯	15	TENSION BAND ARM UNIT	T	M26, 32	(C-8), * (P-4) <Note 1>	(+)
⑰	16, 14	CASSETTE STAND S ASS'Y	T	M26, 33	2 (S-6), * Connector	(+) <Note 2>

STEP /LOC No.	START-ING No.	PART		REMOVAL Fig. No.	REMOVAL REMOVE *UNHOOK/UNLOCK/RELEASE	INSTALLATION ADJUSTMENT #CONDITION
⑱	18	SHIELD COVER	B	M27	(S-7)	
⑲	18,11, 10,2	LOADING GUIDE ASS'Y	T	M26,34	6(S-8), *(L-1), *Connector	(+) <Note 2> <Note 3> # Loading
⑳	19	TAKEUP SHAFT HOLDER ASS'Y	T	M26	(C-9)	(+) <Note 1>
㉑	19	SUPPLY SHAFT HOLDER ASS'Y	T	M26	----------	(+)
㉒	19	V STOPPER BASE ASS'Y	T	M26	2(S-9)	
㉓	19,13	PRESSURE ROLLER ARM UNIT	T	M26, M35	(R-2),(C-10), *(P-5), <Note 1>	(+) See, Hooking Condition.
㉔	23,5	CAPSTAN MOTOR UNIT	T	M26,27, M35	*Capstan Belt, 3(S-10), *Connector	<Note 2> See, Replacement of Capstan Motor Unit.
㉕	4	CASSETTE STAND-T	T	M26, M35	2(S-11)	(+) <Note 2>
㉖	19	RING GUIDE 1	T	M36	(S-12)	See, setting condition.
㉗	19	RING GUIDE 3	T	M36	(S-13)	See, setting condition.
㉘	27,26, 21,20	LOADING RING S UNIT	T	M26, M36	----------	(+) Align the Hole with punch Mark.
㉙	28	LOADING DRIVE GEAR-T	T	M36	(C-11) <Note 1>	(+)
㉚	28	RING GUIDE GEAR-S (2 USED)	T	M36	----------	---------- White Color Gear
㉛	31	RING LIMITER	T	M26,37	(S-14)	
㉜	28	LOADING RING T UNIT	T	M36, M37	----------	See, setting Condition. Align the Punch Mark with the Notch.
㉝	31	LOADING IDLE GEAR	T	M26,37	----------	(+) Align the Punch Mark with the Notch.
㉞	32,28, 19	RING GUIDE GEAR-T (2 USED)	T	M37	----------	(+) Black Color Gear # STOP MODE
㉟	10	LOADING DRIVE GEAR-S	T	M36, M37	(C-12) <Note 1>	(+)
㊱	33,32, 30,28	RING GUIDE-2	T	M36, M37	(S-15)	
㊲	32,28,22, 19,17	LOADING GUIDE-S UNIT	T	M38	3(S-16)	<Note 2>

List of Abbreviations:
T = Top, B = Bottom,
(R-1) = Retaining Ring (R-1); (P-1) = Spring (P-1); (S-1) = Screw (S-1);
(W-1) = Washer (W-1); 2(S-2) = 2 Screws (S-2); (C-1) = Cut Washer (C-1);
(L-1) = Locking Tab (L-1)
(+) = Refer to Exploded Views for Lubrication information

EARTH PLATE

LATION
JUSTMENT
NDITION
2> <Note 3>
oading
.>
king
n.
<Note 2>
lacement of
Motor Unit.
<Note 2>
cing
n.
cing
n.
gn the Hole
n punch Mark.
----
olor Gear
tting
on.
he Punch Mark
e Notch.
e Punch Mark
Notch.
k Color Gear
ODE
<Note 2>

TOP VIEW

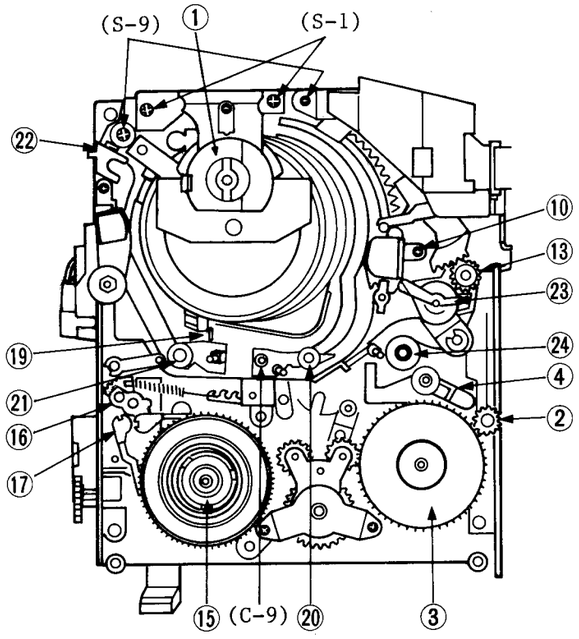

Fig. M26

BOTTOM VIEW

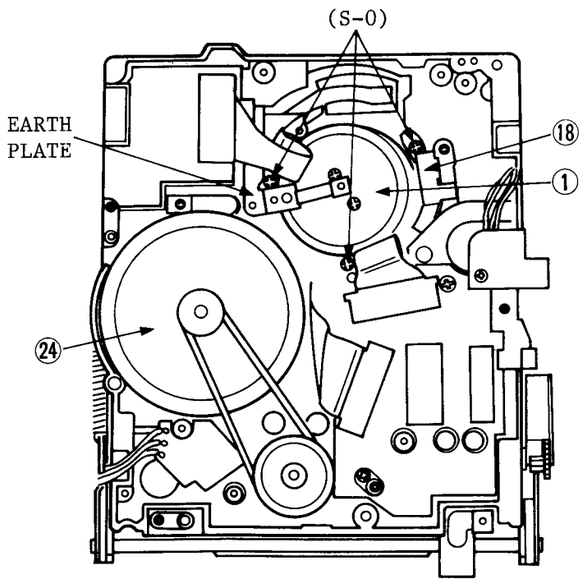

Fig. M27

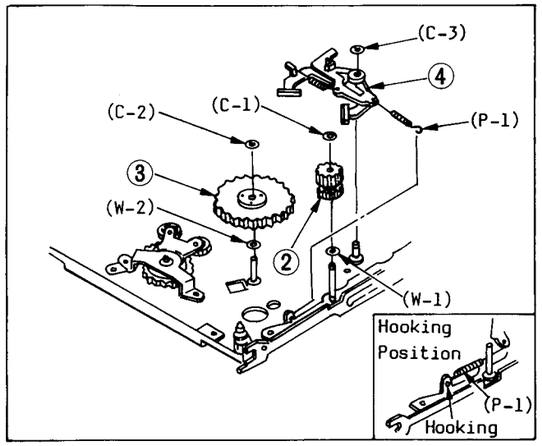

Fig. M28

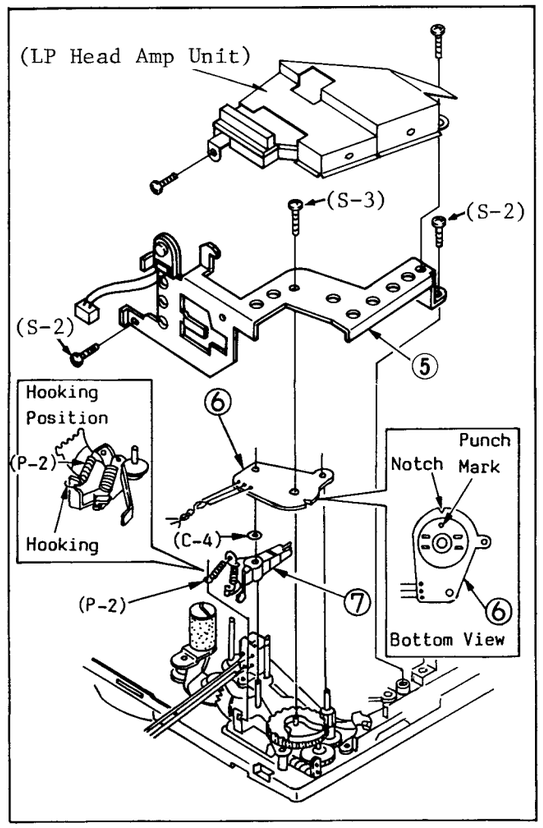

Fig. M29

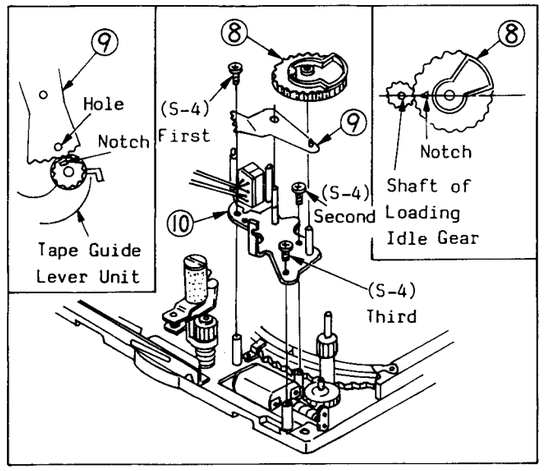

Fig. M30

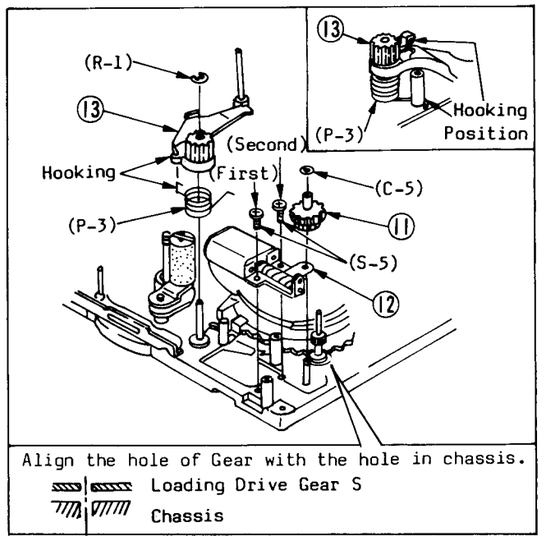

Fig. M31

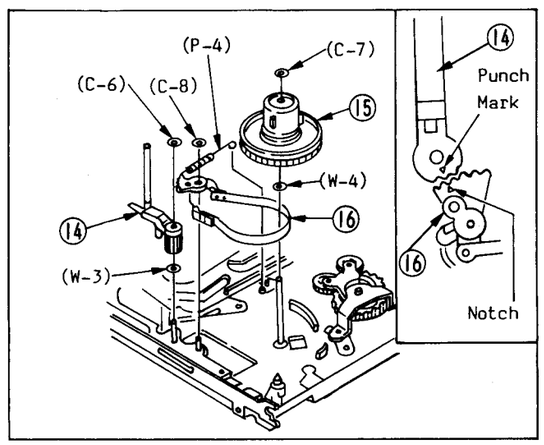

Fig. M32

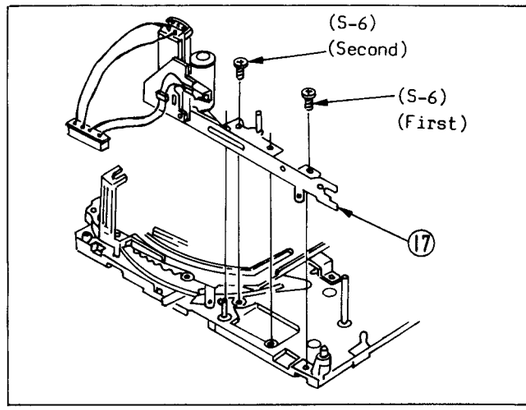

Fig. M33

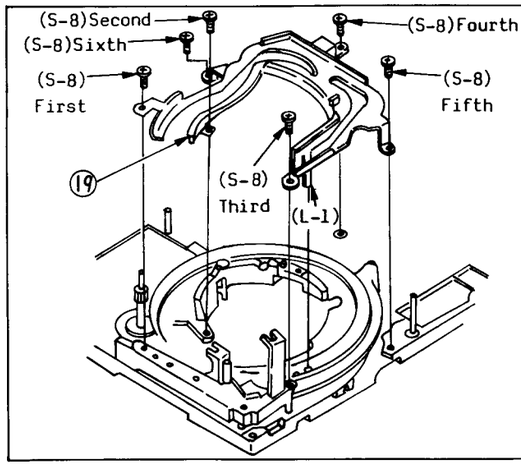

Fig. M34

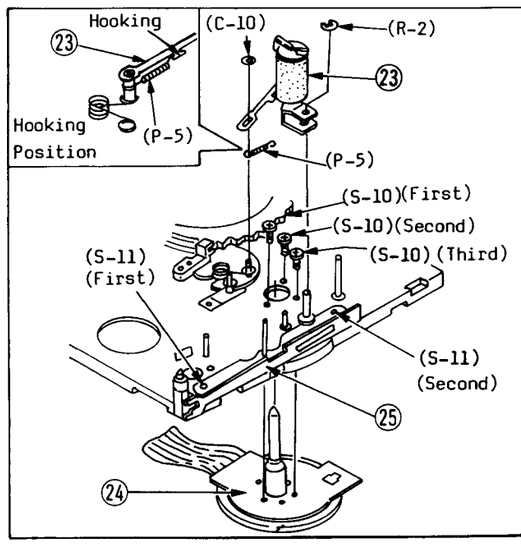

Fig. M35

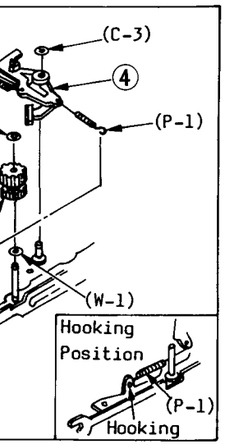

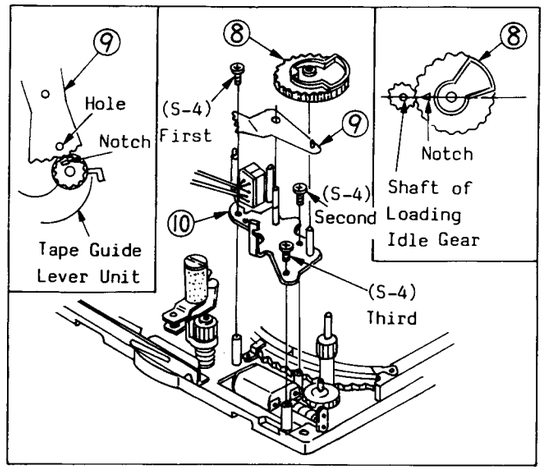

Fig. M30

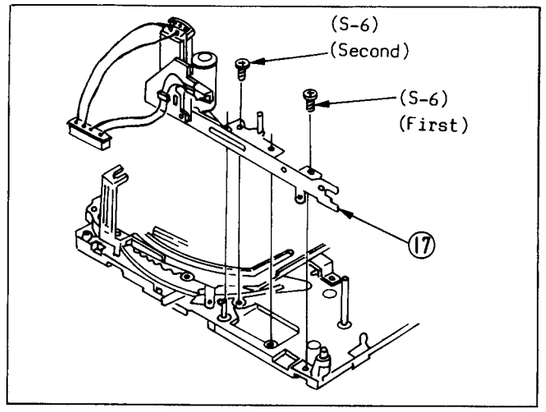

Fig. M33

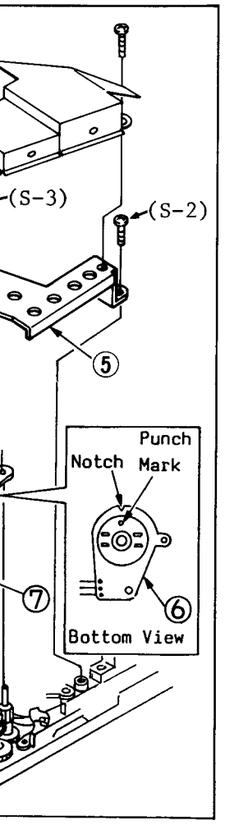

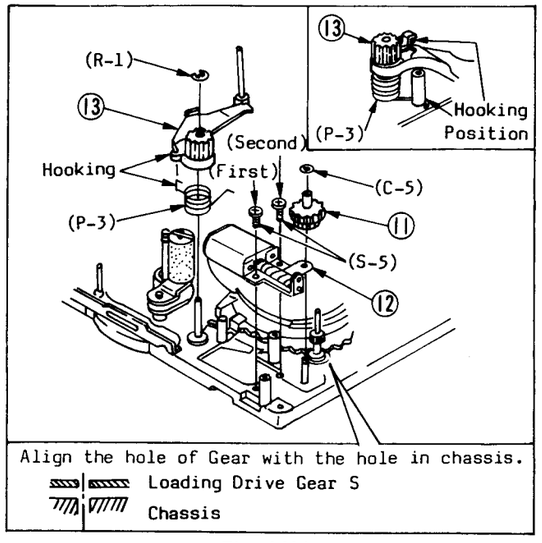

Fig. M31

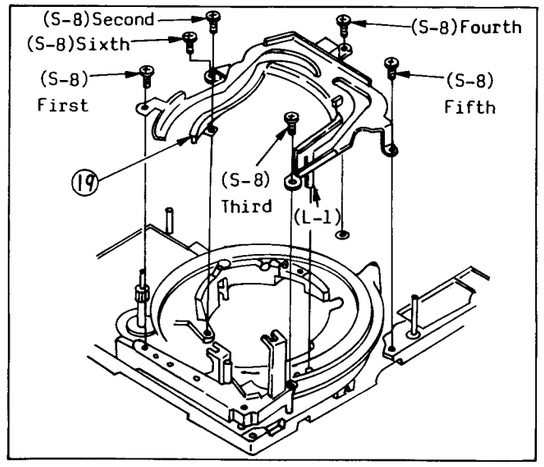

Fig. M34

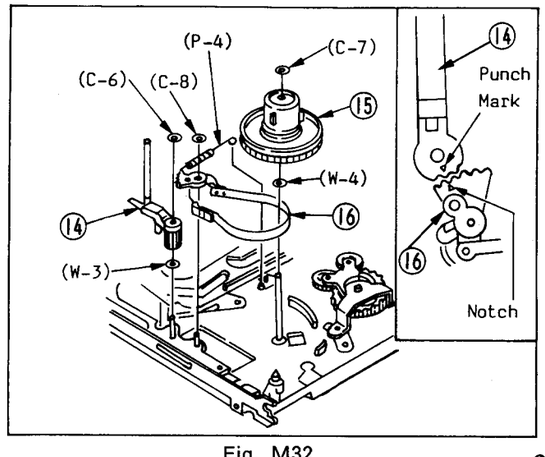

Fig. M32

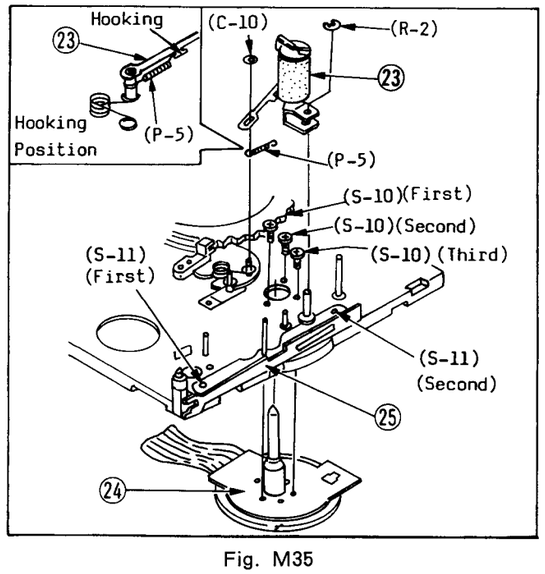

Fig. M35

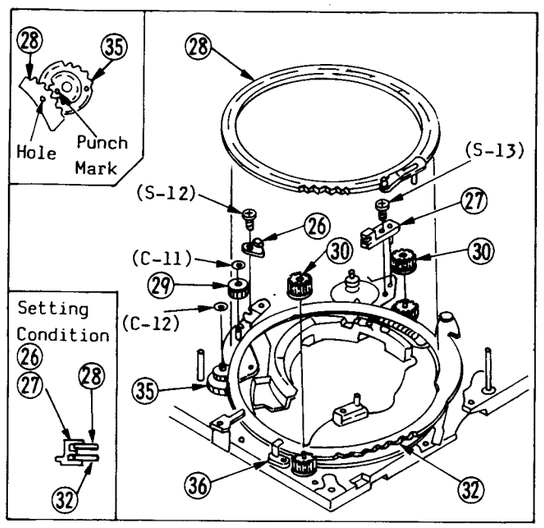

Fig. M36

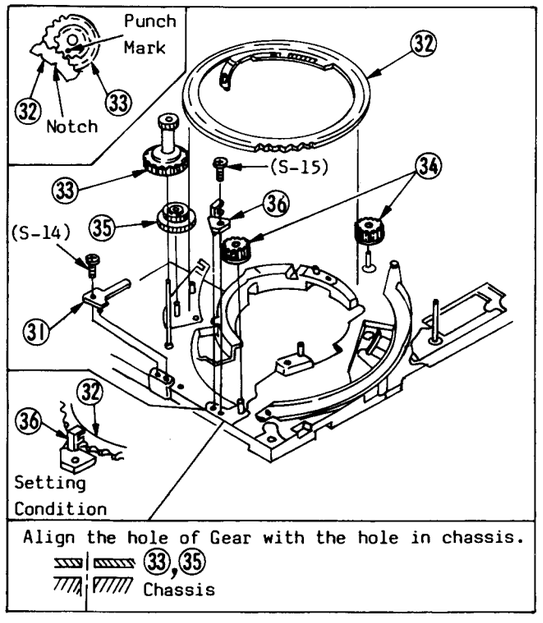

Fig. M37

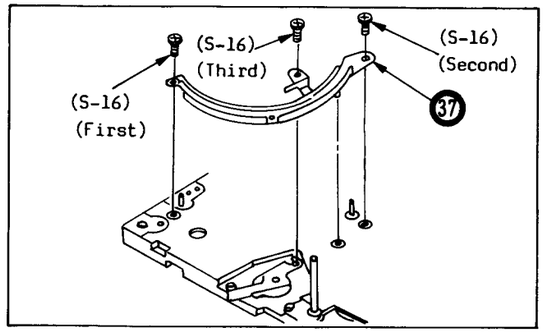

Fig. M38

Reference's <Notes> in Table 7 :

1. This Cut Washer is not reusable. If removed, install a new one.
2. In each figure, tighten the screws in the order indicated in the diagram.
3. Remove the shield cover over the PG Pickup to allow the release of (L-1).

Service Fixtures & Tools

VFM8180H8PF VHS-C Alignment Tape	VFK27 Head Cleaing Stick	MOR265 Morlytone Grease
VFK0382 CAMERA HOLDER	VFK0304 Y/C Separator	VFK0326 Hex. Wrench Set (0.7, 0.9, 1.2, 1.5, 1.6, 2, 2.4, 3 mm)
VFK0431 Camera Holder Arm (NEW) (3 pcs)	Extension Cables	
VFK0432 Holder Spacer (NEW)		
XSN26+18 Screw		
VFK0374 VFK0375 Colour Temperature Conversion Filter		

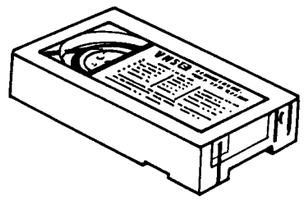
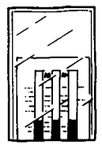

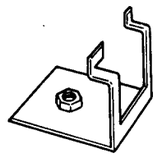
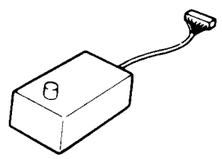
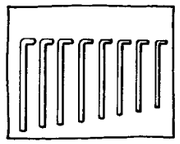
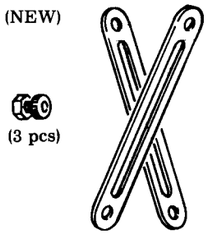
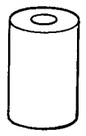

VFKS0067 (NEW)

VFK0429 (NEW)

VFKS0068 (NEW)

VFKS0060

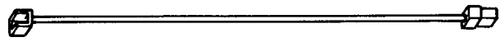

VFK0430 (NEW)

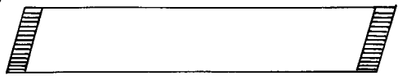

VFK0380

VFKS0074 (NEW)

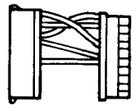

2-4. ELECTRICAL ADJUSTMENT PROCEDURES

2-4-1. ELECTRICAL ADJUSTMENT FOR CAMERA SECTION

TEST EQUIPMENT AND TOOLS

The following equipment is required for adjustment of the CAMERA section of VHS–C Movie.

1. Oscilloscope
   Dual Trace, 25MHz, 2mV/DIV,
   10:1 Probe
   1:1 Probe
2. Digital Volt Meter or VTVM
3. Frequency Counter
4. Vectorscope
5. Light Meter
6. Tripod
7. Colour Video Monitor
8. Lighting
   140 footcandles (1400lux), on the chart surface 3200 degrees K.
9. Reflection Chart
   *Logarithmic Gray Scale Chart
   (Part No.: YWV2310RB99)
   *Colour Chip Chart
   (Part No.: YWV2100RB98)
   *Ball Chart
   (Part No.: YWV2100RB03)
   *Hunting Chart
   (Included in this Service Manual)
   *White Chart (Card)
   (The white paper is available as a white chart)
   *J Chart
   (Part No.: YWV2100RB3)
   *B/W Chart
   (Included in this Service Manual)
   *Gray–White Chart
   (Included in this Service Manual)
10. Plastic Tip Driver
11. Camera Unit Holder
    (Part No.: VFK0382)
12. Camera Holder Arm
    (Part No.: VFK0431)

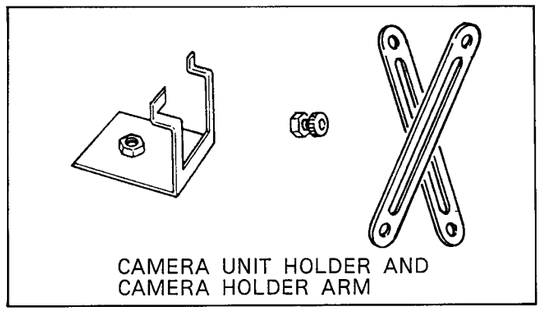

Fig. C1

13. Color temperature conversion filter
    *C12 Filter
    (Part No.: VFK0374)
    *C2 Filter
    (Part No.: VFK0375)
14. Camera Extension Cables
    (Part No.: VFKS0060, VFK0380, VFK0430)

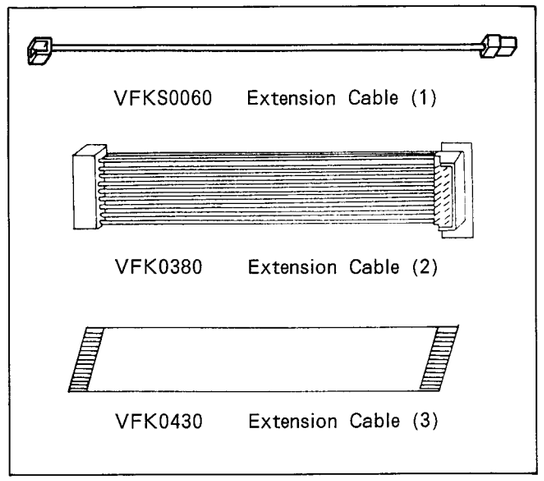

Fig. C2

PREPARATION

1) Remove the Side Case (L) and Side Case (R) from the Unit.
   (Refer to the Disassembly Section.)
2) Mount the Camera Unit on the tripod using the Camera Unit Holder (VFK0382) and Camera Holder Arm (VFK0431).
3) Connect the Camera Unit, Video Recorder Unit, AC Adaptor, Camera Operation Unit and Colour Monitor TV as shown in Fig. C3.
4) Remove the Flexible Cable between FP301 and P1002 And re–connect the Camera Extension Cable (3) (VFKW0053C) to these connectors.

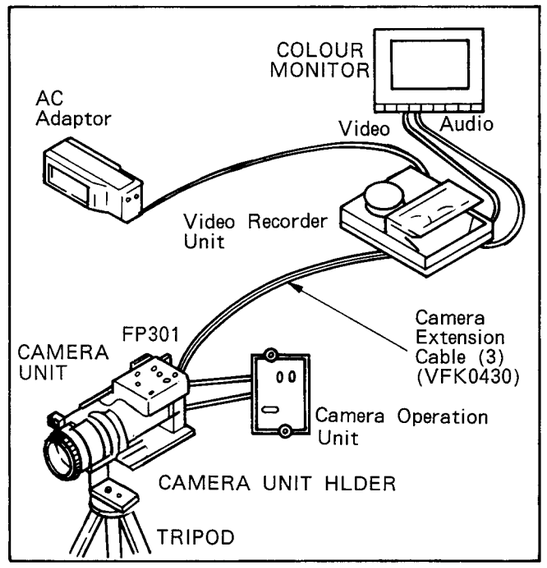

Fig. C3

Note:
1. Set the WH
   position duri
2. Service work
   performed
   maintain lens
3. To achieve t
   up the came
4. FOR TRIGGE
   To trigger t
   the followin
   points. (H–F
   – Pin 13 of
   after co
   Procedure(s).
5. If you use
   colour temp
   is 3200 degr

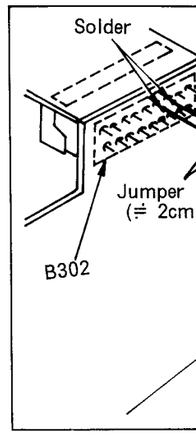

HOW TO READ PROCEDURES

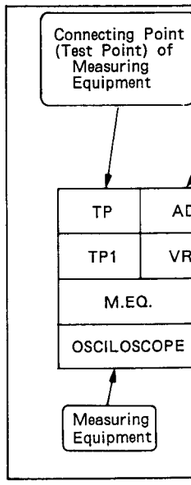

es
0, VFK0380, VFK0430)

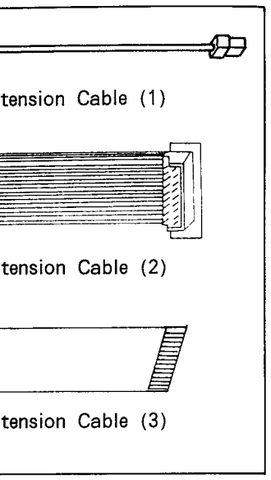

. C2

e (L) and Side Case (R)

nbly Section.)
nit on the tripod using the
VFK0382) and Camera Holder

Unit, Video Recorder Unit,
Operation Unit and Colour
in Fig. C3.
Cable between FP301 and
ct the Camera Extension
C) to these connectors.

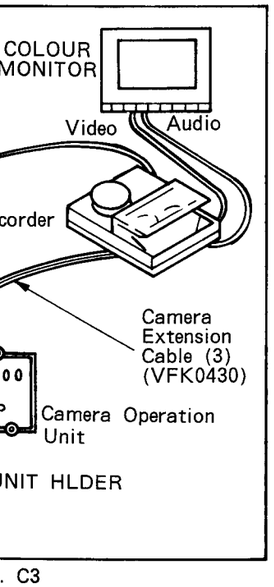

. C3

Note:
1. Set the White Balance Switch to INDOOR position during adjustment procedures.
2. Service work for the Camera Unit must be performed in a dust-free location to maintain lens cleanliness.
3. To achieve the best adjustment results, warm up the camera before adjusting.
4. FOR TRIGGER (Refer to Fig. C4)
   To trigger the scope, solder jumper wires to the following pins that are used as test points. (H-Rate – Pin 12 of B302 and V-Rate – Pin 13 of B302). Remove the jumper wires after completing the adjustment Procedure(s).
5. If you use the reflection chart, ensure the colour temperature of the light source used is 3200 degrees K.

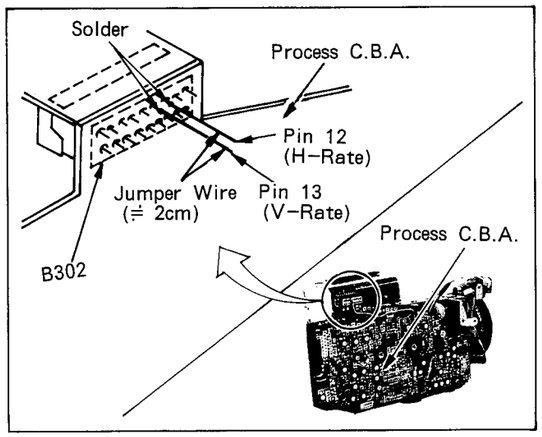

Fig. C4

HOW TO READ THE ADJUSTMENT PROCEDURES

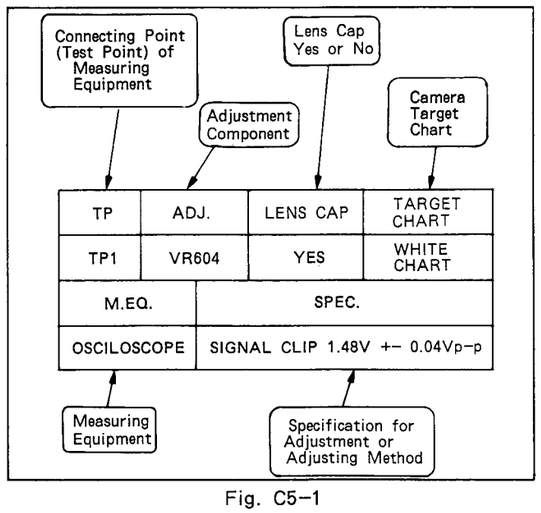

Fig. C5-1

CAMER SECTION ADJUSTMENT FLOW CHART

CCD DRIVE SECTION

1. BACK FOCUS ADJUSTMENT
2. PLL FREQUENCY ADJUSTMENT
3. V-SUB ADJUSTMENT
4. CCD OUTPUT ADJUSTMENT

PROCESS SECTION

5. PEDESTAL LEVEL ADJUSTMENT
6. ALC ADJUSTMENT
7. AGC ADJUSTMENT
8. YH LEVEL ADJUSTMENT
9. WHITE BALANCE ADJUSTMENT
10. CARRIER BALANCE AND BLACK PEDESTAL ADJUSTMENT
11. AUTO WHITE BALANCE MODE ADJUSTMENT
11-1. AWB AUTO MODE (OUTDOOR) ADJUSTMENT
11-2. AWB AUTO MODE (OFFSET) ADJUSTMENT
12. COLOUR PHASE AND R-Y/B-Y GAIN ADJUSTMENT
13. HIGH INTENSITY SUPPRESS ADJUSTMENT
14. LOW LIGHT INDICATION ADJUSTMENT
15. AWT MODE ADJUSTMENT
15-1. AWT MODE (OFFSET) ADJUSTMENT
15-2. AWT MODE (GAIN) ADJUSTMENT
15-3. HIGH COLOUR TEMPERATURE ADJUSTMENT

AUTO FOCUS SECTION

16. AF GATE ADJUSTMENT
17. BIMOLF GAIN CONTROL ADJUSTMENT
18. AF AMP BIAS GAIN ADJUSTMENT
19. AF VH FREQUENCY ADJUSTMENT

Fig. C5-2

CCD DRIVE SECTION

1. BACK FOCUS ADJUSTMENT

(1) Aim the Camera at the Hunting Chart in 3m distance and zoom all the way in (Fully tele position).
(2) Focus the lens on the object.
(3) Adjust the relay lens adjustment point as shown in Fig. C6.

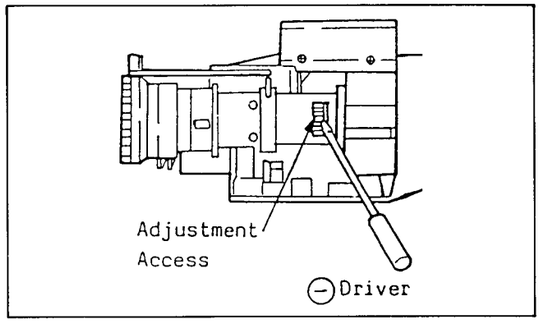

Fig. C6

(4) Zoom all the way back and adjust the back focus pitch so that the sharpest focus is obtained.
(5) Repeat the procedure as follows, zoom in, focus, zoom out and adjust until the best focus is obtained over the entire Zoom range.

2. PLL FREQUENCY ADJUSTMENT

(1) Remove the Sensor Shield Case by removing its 4 Screws.

TP	ADJ.	LENS CAP	CHART
PIN 10 OF B201	C206		
M.EQ.		SPEC.	
FREQUENCY COUNTER		9.65625MHz +– 10Hz	

Note:
B201, C206 : CCD Drive C.B.A.

3. V-SUB ADJUSTMENT

TP	ADJ.	LENS CAP	CHART
	VR201	NO	HALOGEN LAMP
M.EQ.		SPEC.	
MONITOR TV		NO BLOOMING	

(1) Zoom allthe way in (Fully teie position) aim the camera at the Halogen Lamp (degrees K) as shown in Fig. C7-1.

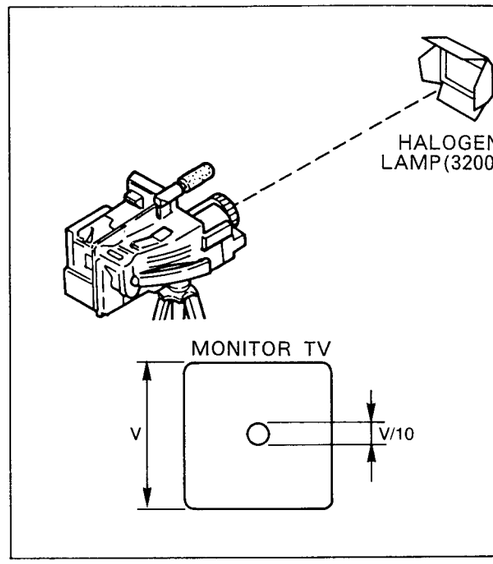

Fig. C7-1

(2) Set the High Speed Shutter SW to "ON" por
(3) Connect a jumper wire between TP10 and TP
fully open the iris.
(4) Adjust the Blooming Control (VR201) so the monitored picture does not contain Blooming.
(5) High Speed Shutter "ON" and "OFF" both r confirm that the monitored picture does contain the Blooming even if the camera m as shown in Fig. C7-2.

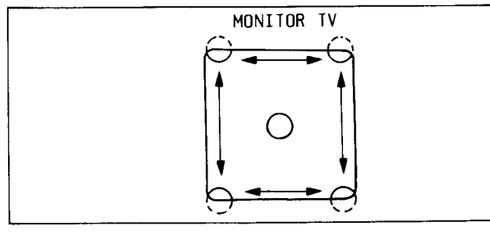

Fig. C7-2

FLOW CHART

T
ENT
T
TMENT
ENT
TMENT
ODE
DOOR)
SET)
Y/B-Y
ESS
J
JUSTMENT
RATURE

AUTO FOCUS SECTION

16. AF GATE ADJUSTMENT
↓
17. BIMOLF GAIN CONTROL ADJUSTMENT
↓
18. AF AMP BIAS GAIN ADJUSTMENT
↓
19. AF VH FREQUENCY ADJUSTMENT

Fig. C5-2

CCD DRIVE SECTION

1. BACK FOCUS ADJUSTMENT

(1) Aim the Camera at the Hunting Chart in 3m distance and zoom all the way in (Fully tele position).
(2) Focus the lens on the object.
(3) Adjust the relay lens adjustment point as shown in Fig. C6.

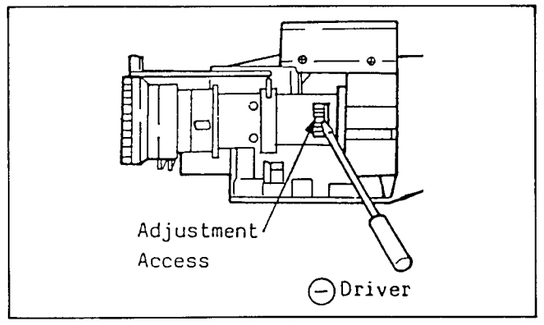

Fig. C6

(4) Zoom all the way back and adjust the back focus pitch so that the sharpest focus is obtained.
(5) Repeat the procedure as follows, zoom in, focus, zoom out and adjust until the best focus is obtained over the entire Zoom range.

2. PLL FREQUENCY ADJUSTMENT

(1) Remove the Sensor Shield Case by removing its 4 Screws.

TP	ADJ.	LENS CAP	CHART
PIN 10 OF B201	C206		
M.EQ.		SPEC.	
FREQUENCY COUNTER		9.65625MHz +- 10Hz	

Note:
B201, C206 : CCD Drive C.B.A.

3. V-SUB ADJUSTMENT

TP	ADJ.	LENS CAP	CHART
	VR201	NO	HALOGEN LAMP
M.EQ.		SPEC.	
MONITOR TV		NO BLOOMING	

(1) Zoom allthe way in (Fully teie position) and aim the camera at the Halogen Lamp (3200 degrees K) as shown in Fig. C7-1.

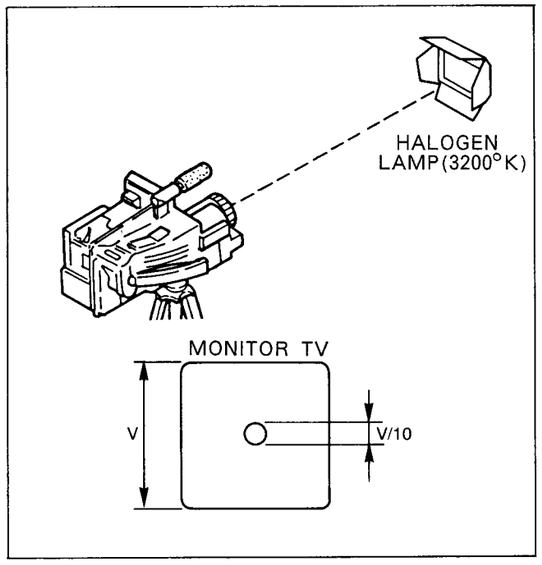

Fig. C7-1

(2) Set the High Speed Shutter SW to "ON" portion.
(3) Connect a jumper wire between TP10 and TP11 to fully open the iris.
(4) Adjust the Blooming Control (VR201) so that the monitored picture does not contain the Blooming.
(5) High Speed Shutter "ON" and "OFF" both mode, confirm that the monitored picture does not contain the Blooming even if the camera moves as shown in Fig. C7-2.

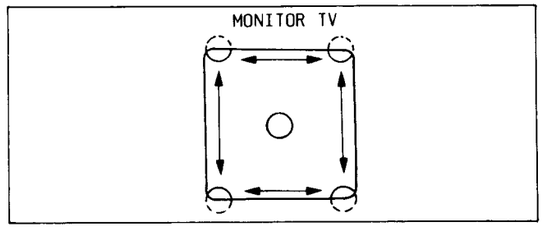

Fig. C7-2

4. CCD OUTPUT ADJUSTMENT

TP	ADJ.	LENS CAP	CHART
TP201	VR202	NO	WHIJ CHART
M.EQ.		SPEC.	
OSCILLOSCOPE		200mV +- 10mV	

Note:
TP201, VR202 : CCD Drive C.B.A.

(1) Aim the camera at the J chart and focus the lens on the object.
(2) Connect the oscilloscope to TP201.
(3) Adjust VR202 so that the signal level is 200+-10mVp-p as shown in Fig. C8.

Note:
Prior to the above adjustment, adjust the iris control (VR301) so that the level at TP1 is 300+-10mV by observing waveform on the oscilloscope.

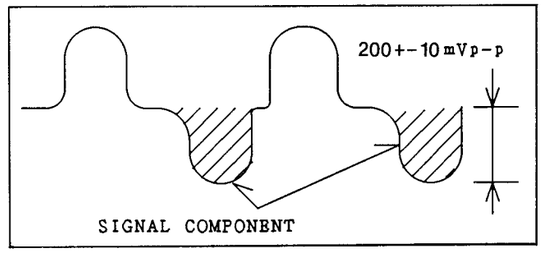

Fig. C8

PROCESS SECTION

5. PEDESTAL LEVEL ADJUSTMENT

TP	ADJ.	LENS CAP	CHART
TP2	VR305	YES	
M.EQ.		SPEC.	
OSCILLOSCOPE		SIGNAL LEVEL EQUALS THE BLANKING (BLNK) LEVEL.	

Note:
TP2, VR305 : Process C.B.A.

(1) Cover the Camera Lens with the Lens Cap.
(2) Connect the scope to TP2 and trigger with Pin 12 of B302 (H-Rate).
(3) Adjust the Pedestal Level Control (VR305) so that the signal level equals the BLK level as shown in Fig. C9.

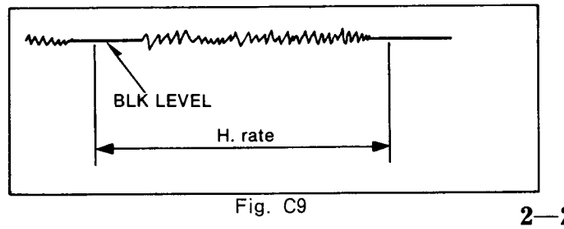

Fig. C9

6. ALC ADJUSTMENT

TP	ADJ.	LENS CAP	CHART
TP1	VR301	NO	GRAY SCALE CHART
M.EQ.		SPEC.	
OSCILLOSCOPE		0.30V +- 0.02Vp-p	

Note:
TP1, VR301 : Process C.B.A.

(1) Aim the camera at the gray scale chart.
(2) Connect the scope to TP1 and trigger with Pin 12 of B302 (H-Rate).
(3) Adjust the Camera Unit to obtain 40usec as shown in Fig. C9.
(4) Adjust the Auto Iris Control (VR301) so that the signal level is 0.30V +- 0.02Vp-p.

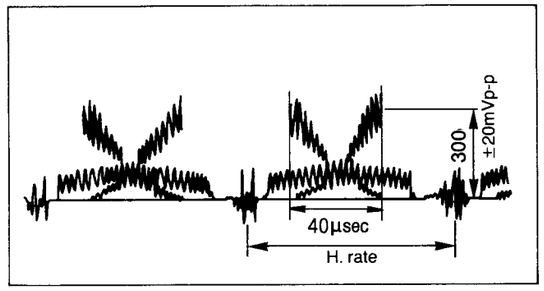

Fig. C10

7. AGC ADJUSTMENT

TP	ADJ.	LENS CAP	CHART
TP2	VR304	NO	GRAY SCALE CHART
M.EQ.		SPEC.	
OSCILLOSCOPE		0.30V +- 0.02Vp-p	

Note:
TP2, VR304 : Process C.B.A.

(1) Aim the camera at the gray scale chart.
(2) Connect the scope to TP2 and trigger with Pin 12 of B302 (H-Rate).
(3) Adjust the Camera Unit to obtain 40usec as shown in Fig. C11.
(4) Adjust the AGC Control (VR304) so that the signal level is 0.30V +- 0.02Vp-p.

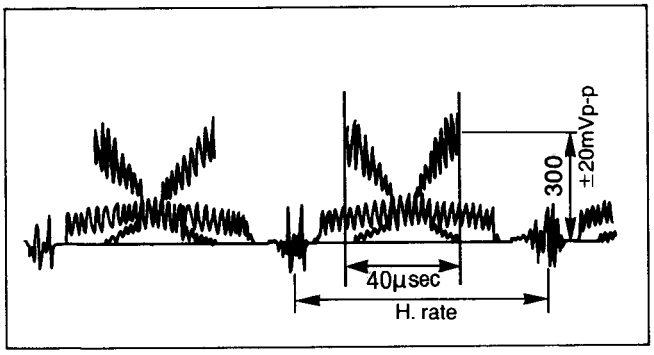

Fig. C11

8. YH LEVEL ADJUSTMENT

TP	ADJ.	LENS CAP	CHART
PIN 7 OF FP 301	VR302	NO	GRAY SCALE CHART
M.EQ.	SPEC.		
OSCILLOSCOPE	A = 1.4V +- 0.06Vp-p		

Note:
VR302, FP301 : Process C.B.A.

(1) Connect the jumper wire between TP4, TP5 and TP6.
(2) Aim the camera at the gray scale chart.
(3) Connect the scope to Pin 7 of FP301 (Refer to Fig. C13).
(4) Adjust the YH Level Control (VR302) so that the signal level "A" is 1.4V +- 0.06Vp-p as shown in Fig. C12.
(5) Disconnect the jumper wire between TP4, TP5 and TP6.

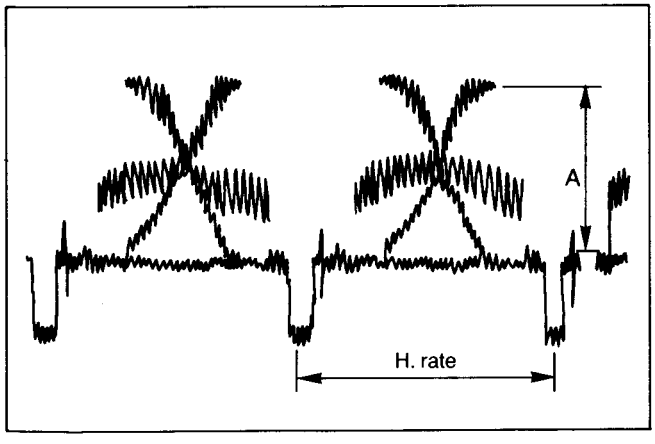

Fig. C12

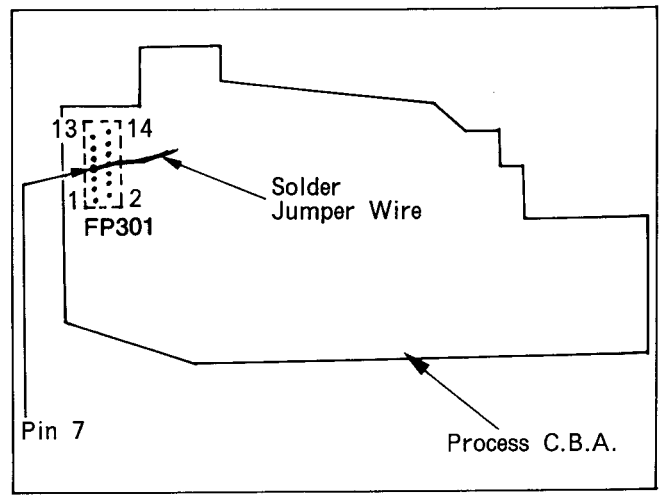

Fig. C13

9. WHITE BALANCE ADJUSTMENT

TP	ADJ.	LENS CAP	CHART
VIDEO OUTPUT	VR322, VR323	NO	WHITE CHART
M.EQ.	SPEC.		
VECTORSCOPE	CENTER OF VECTORSCOPE		
OSCILLOSCOPE	WAVEFORM IS MINIMIZED		

Note:
VR322, VR323 : Process C.B.A.

WITH VECTORSCOPE
(1) Connect a jumper wire between TP4, TP5 and TP6.
(2) Aim the camera at the White Chart.
(3) Supply the video signal to the vectorscope.
(4) Adjust the White Balance Controls (VR322 and VR323) so that the colour vectors are collected at the center of screen on the vectorscope as shown in Fig. C14.
(5) Remove the jumper wire between TP4, TP5 and TP6.

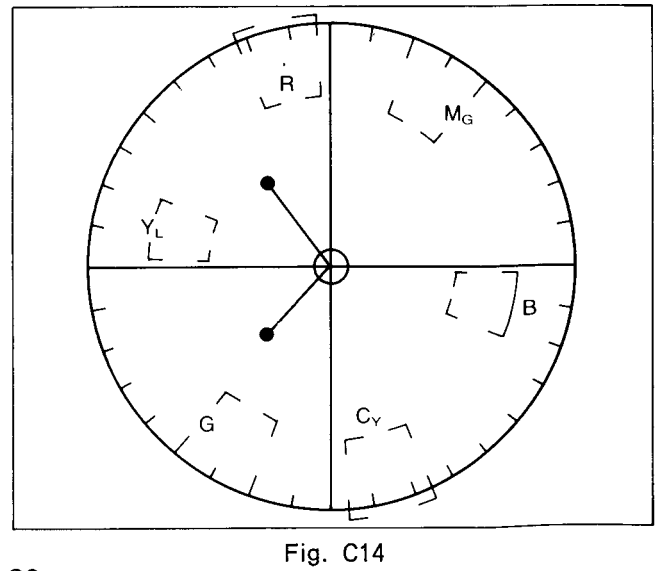

Fig. C14

WITH OSCILLOSCOPE
(1) Adjustment condition and procedure are same as using vectorscope
(2) Adjust VR322 and VR323 so that the waveform is minimized.

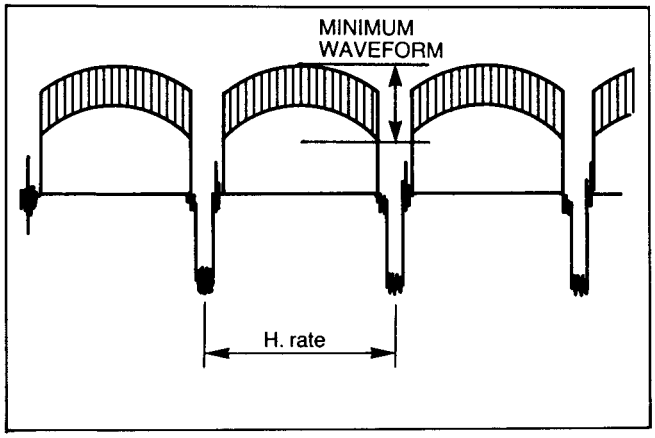

Fig. C15

10. CARRIER BALANCE AND BLACK PEDESTAL ADJUSTMENT

TP	ADJ.	LENS CAP	CHART
VIDEO OUTPUT	VR308 VR318, VR319	YES	

M.EQ.	SPEC.
VECTORSCOPE	CENTER OF VECTORSCOPE
OSCILLOSCOPE	WAVEFORM IS MINIMIZED

Note:
VR308, VR319, VR318 : Process C.B.A.

WHTH VECTORSCOPE
(1) Connect the jumper wire between TP4, TP5 and TP6.
(2) Cover the Camera Lens with the Lens Cap.
(3) Adjust the Black Pedestal Control (VR308) so that the colour vectors collect at the centre of screen on the vectorscope.
(4) Connect the jumper wire between TP6 and Pin 7 of BA307
(5) Adjust the Carrier Balance Controls (VR318 and VR319) so that the colour vectors collect at the centre of screen on the vectorscope.
(6) Disconnect the jumper wire between TP4, TP5 TP6 and Pin 1 of BA307-1.

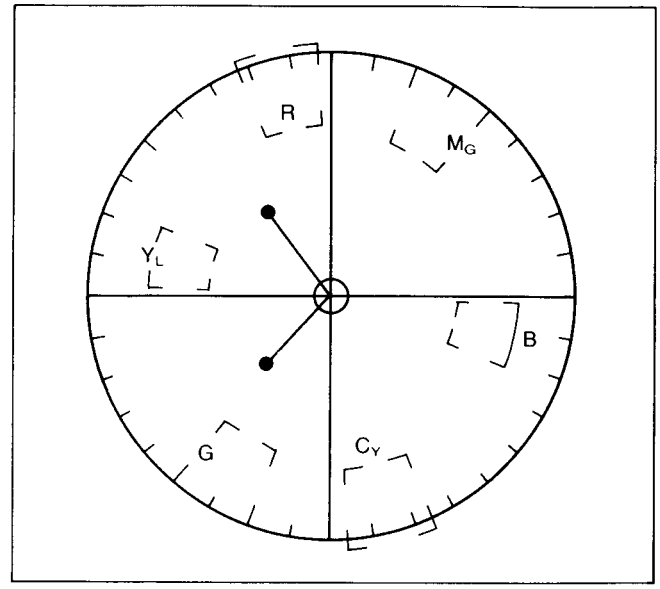

Fig. C16

WITH OSCILLOSCOPE
(1) Adjustment condition and procedure are same as using Vectorscope.
(2) Adjust VR318 and VR319 so that the waveform is minimized.

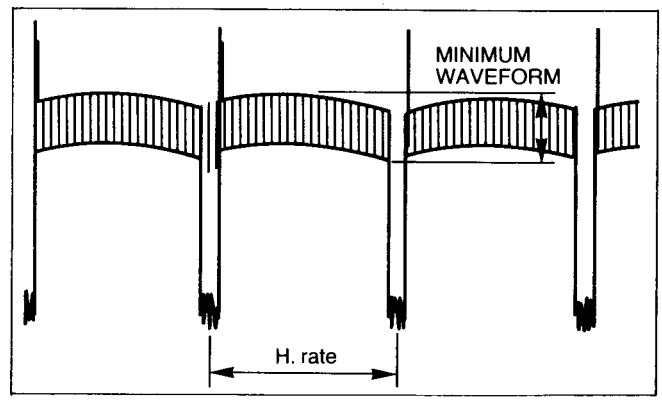

Fig. C17

11. AUTO WHITE BALANCE MODE ADJUSTMENT

Note:
1) Perform both sections of this procedure.

11-1. AWB AUTO MODE (OUTDOOR) ADJUSTMENT

TP	ADJ.	LENS CAP	CHART
VIDEO OUTPUT	VR312 VR313	NO	WHITE CHART

M.EQ.	SPEC.
VECTORSCOPE	CENTER OF VECTORSCOPE
OSCILLOSCOPE	WAVEFORM IS MINIMIZED

Note:
VR312, VR313 : Process C.B.A.

WITH VECTORSCOPE
(1) Set the WHITE BALANCE Switch on the Camera Operation Unit to the "OUTDOOR".
(2) Connect a jumper between TP4, TP5 and TP6.
(3) Aim the camera at the white chart using a 3200 degrees K Halogen lamp.
(4) Supply the video signal to the vectorscope.
(5) Attach the colour temperature conversion filters (VFK0374 andVFK0375) which converts 3200 degrees Kelvin to 5800 degrees Kelvin in front of the Lens (Refer to Note 1 of item.
(6) If the color temperature conversion filter is not available, use a day light source (Refer to Note 2 of No. 15-3).
(7) Adjust the W.B. (B-Y) OUTDOOR GAIN and W.B. (R-Y) OUTDOOR GAIN Controls (VR312 and VR313) so that the colour vectors move to the centre of screen on the vectorscope. (Refer to Fig. C19.)
(8) Remove the colour temperature conversion filter with the fixture from the lens.

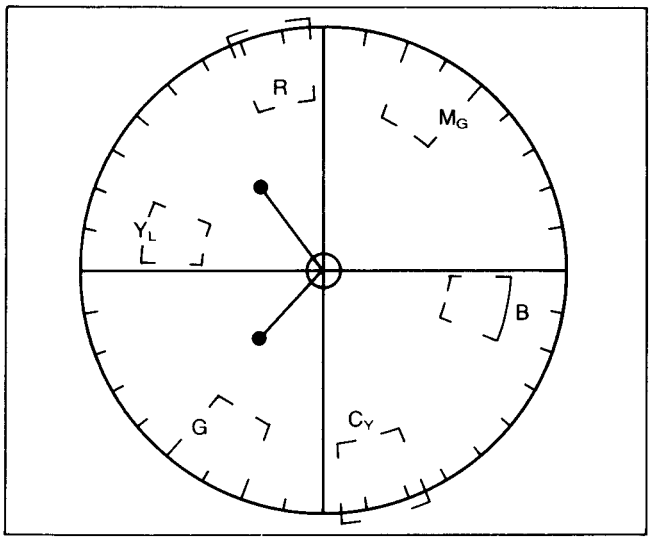

Fig. C18

WITH OSCILLOSCOPE
(1) Adjustment condition and procedure are same as using vectorscope.
(2) Adjust VR312 and VR313 so that the waveform is minimized.

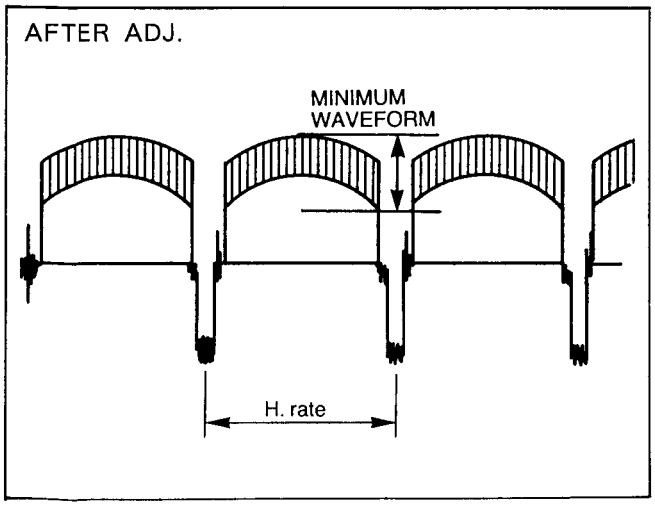

Fig. C20

11-2. AWB AUTO MODE (OFFSET) ADJUSTMENT

TP	ADJ.	LENS CAP	CAHRT
VIDEO OUTPUT	VR314, VR315	NO	GRAY SCALE CHART
M.EQ.	SPEC.		
VECTORSCOPE	CENTER OF VECTORSCOPE		
OSCILLOSCOPE	WAVEFORM IS MINIMIZED		

Note:
VR314, VR315 : Process C.B.A.

WITH VECTORSCOPE
(1) Set the WHITE BALANCE Switch on the Camera Operation Unit to the "INDOOR".
(2) Remove the jumper wire between TP4, TP5 and TP6.
(3) Adjust the W.B. (R-Y OFFSET) and W.B. (B-Y OFFSET) Controls (VR314 and VR315) so that the colour vectors move to the centre of screen on the vectorscope. (Refer to Fig. C20-1.)

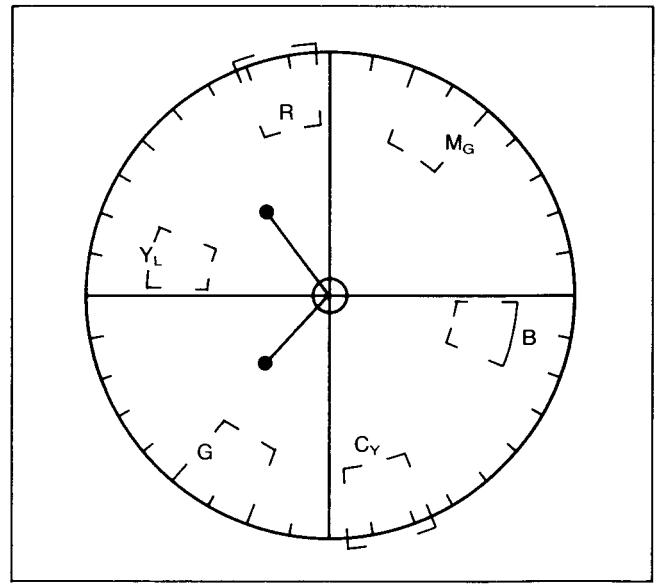

Fig. C20-1

WITH OSCILLOSCOPE
(1) Adjustment condition and procedure are same as using vectorscope.
(2) Adjust VR314 and VR315 so that the waveform is minimized.

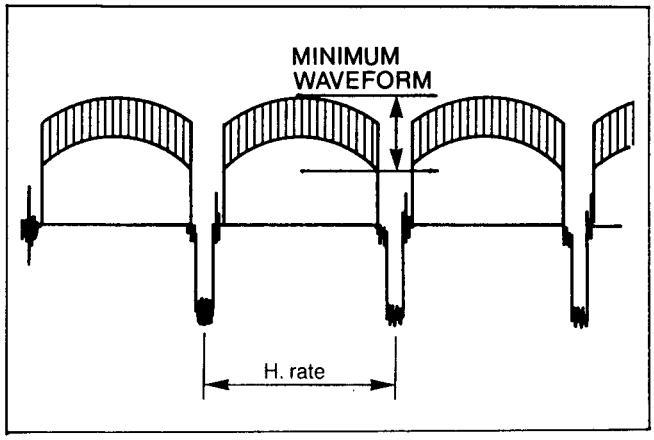

Fig. C21

12. COLOUR PHASE AND R-Y/B-Y GAIN ADJUSTMENT

TP	ADJ.	LENS CAP	CHART
VIDEO OUTPUT	VR316, VR317 VR303, VR324	NO	COLOUR CHIP CHART
M.EQ.	SPEC.		
VECTORSCOPE	FIG. C22		

Note:
VR316, VR317, VR303, VR324 : Process C.B.A.

(1) Connect a jumper wire between TP4, TP5 and TP6.
(2) Aim the camera at a colour chip chart.
(3) Supply the video signal to the vectorscope.
(4) Adjust the Colour Phase Control (VR303 and VR324), the R-Y Gain Control (VR316) and the B-Y Gain Control (VR317) so that the vector of each colour is as shown in Fig. C22.
(5) Remove the jumper wire between TP4, TP5 and TP6.

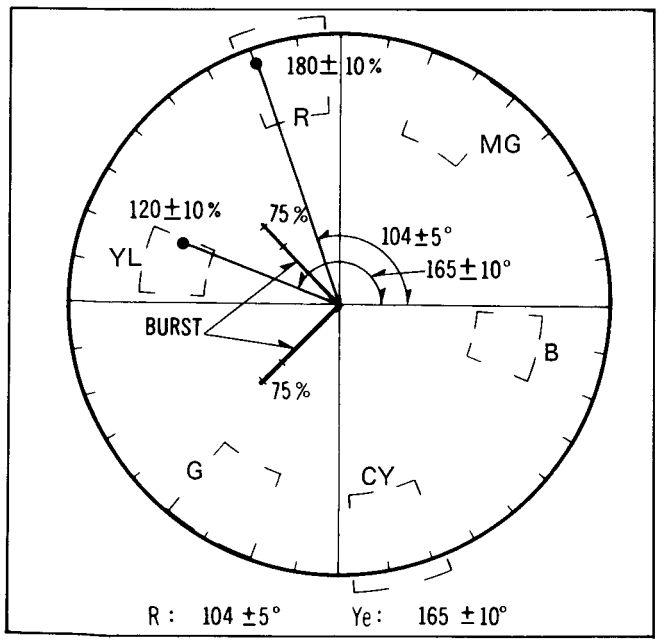

Fig. C22

13. HIGH INTENSITY SUPPRESS ADJUSTMENT

TP	ADJ.	LENS CAP	CHART
	VR306	NO	GRAY SCALE CHART
M.EQ.	SPEC.		
TV MONITOR	NO COLOUR INTERFERENCE		

Note:
VR306 : Process C.B.A.

(1) Aim the camera at the gray scale chart and focus the lens object.
(2) Press the back light button and keep as it is.
(3) Adjust VR306 so that the monitored gray scale chart does not have colour interfarence.

14. LOW LIGHT INDICATION ADJUSTMENT

TP	ADJ.	LENS CAP	CHART
TP12	VR107	NO	WHITE CHART
M.EQ.	SPEC.		
OSCILLOSCOPE	REFER TO FIG. C23.		

Note:
TP12, VR107 : Process C.B.A.

(1) Connect the oscilloscope to TP12 and set it in DC mode.
(2) Shade surface of AWT Sensor with hand and adjust VR107 so that DC level at TP12 is changed from "LOW" to "HIGH"

Note:
For more acurate adjustment;
When the illumination of the surface of AWT Sensor is 6lux,the level must be "LOW".
When the illumination of the surface of AWT Sensor is 3lux,the level must be "HIGH".

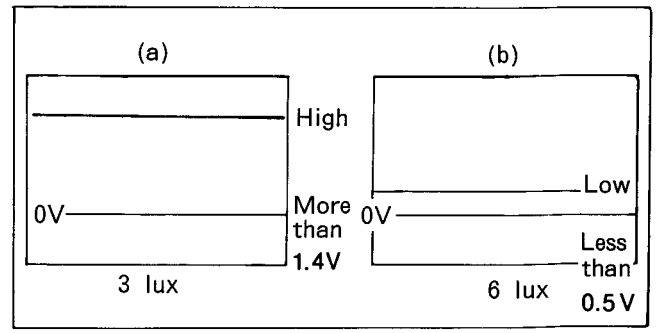

Fig. C23

15. AWT MODE ADJUSTMENT

Note:
1) Perform all three sections of this procedure.
2) Set the WHITE BALANCE Switch on the CAMERA OPERATION UNIT to the "AUTO".

15-1. AWT MODE (OFFSET) ADJUSTMENT

TP	ADJ.	LENS CAP	CHART
VIDEO OUTPUT	VR105, VR106	NO	WHITE CHART
M.EQ.		SPEC.	
VECTORSCOPE		CENTER OF VECTORSCOPE	
OSCILLOSCOPE		WAVEFORM IS MINIMIZED	

Note:
VR105, VR106 : Process C.B.A.

WITH VECTORSCOPE
(1) Aim the camera at the white chart.
(2) Supply the video signal to the vectorscope.
(3) Rotate VR101 and VR102 fully clockwise as shown in Fig. C24.

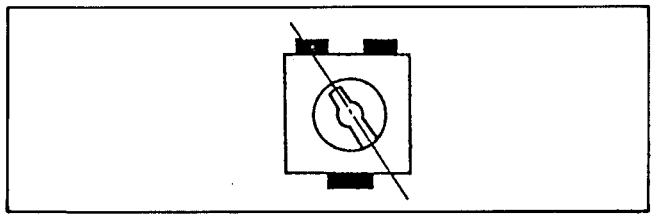

Fig. C24

(4) Adjust the AWT (R-Y OFFSET) and AWT (B-Y OFFSET) controls (VR105 and VR106) so that the colour vectors move to the centre of screen on the vectorscope. (Refer to Fig. C25.)

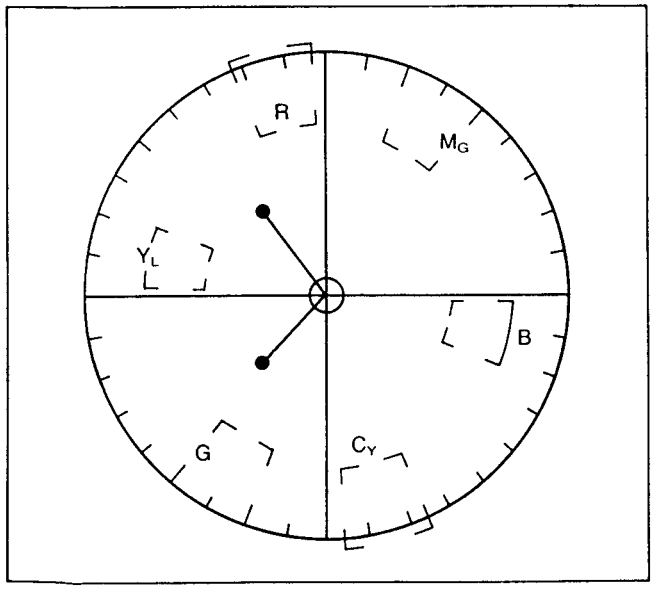

Fig. C25

WITH OSCILLOSCOPE
(1) Adjustment condition and procedure are same as using vectorscope.
(2) Adjust VR105 and VR106 so that the waveform is minimized.

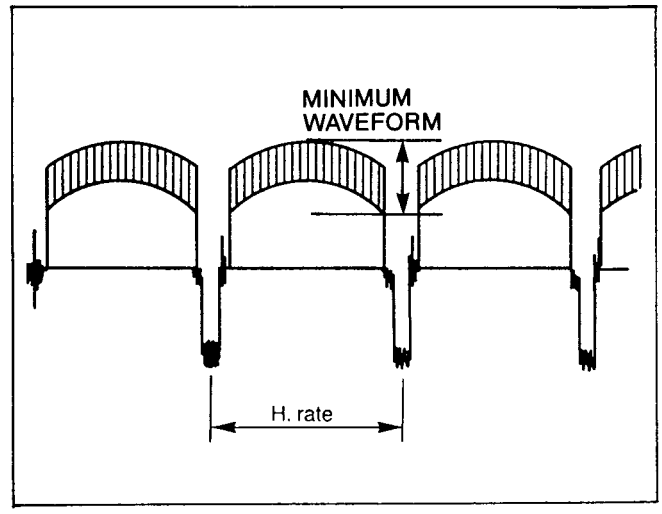

Fig. C26

15-2. AWT MODE (GAIN) ADJUSTMENT

TP	ADJ.	LENS CAP	CHART
VIDEO OUTPUT	VR103, VR104, VR105, VR106	NO	WHITE CHART
M.EQ.		SPEC.	
VECTORSCOPE		CENTER OF VECTORSCOPE	
OSCILLOSCOPE		WAVEFORM IS MINIMIZED	

Note:
VR103, VR104, VR105, VR106 : Process C.B.A.

WITH VECTORSCOPE
(1) Aim the camera at the white chart using a 3200 degrees K Halogen lamp.
(2) Supply the video signal to the vectorscope.
(3) Attach the color temperature conversion filter (VFK0375) which converts 3200 degrees Kelvin to 3400 degrees Kelvin in front of the Lens and AWT Sensor.(Refer to Note 1 of item. 15-3)
(4) If the colour temperature conversion filter is not available, use a day light source. (Refer to Note 2 of item. 15-3)
(5) Adjust the AWT (R-Y GAIN) and AWT (B-Y GAIN) Controls (VR103 and VR104) so that the color vectors move to the centre of screen on the vectorscope. (Refer to Fig. C27.)

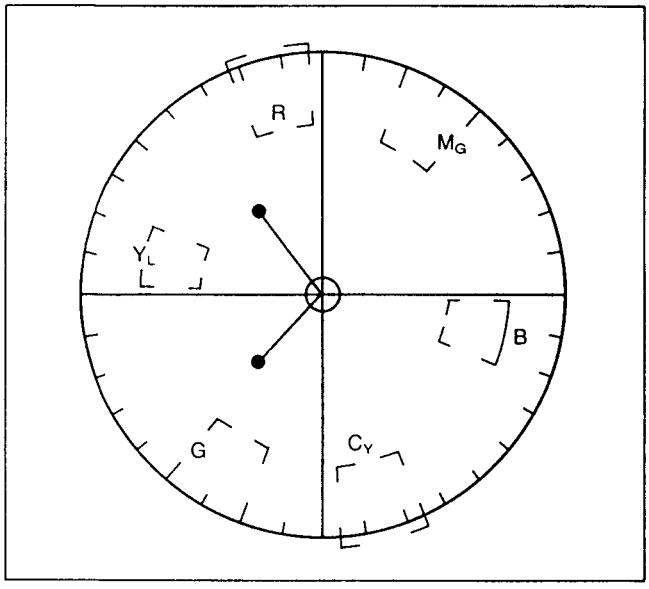

Fig. C27

(6) Next, remove the colour temperature conversion filter with the fixture from the Lens.
(7) If the colour vectors do not collect at the centre, adjust the AWT (R-Y OFFSET) and AWT (B-Y OFFSET) Controls (VR105 and VR106) so that the colour vectors move to the centre of screen on the vectorscope.
(8) Repeat steps (1)-(7) so that the colour vectors collect at the centre of screen on the vectorscope.

WITH OSCILLOSCOPE
(1) Adjustment condition and procedure are same as using vectorscope.
(2) Adjust VR103, VR104, VR105 and VR106 so that the waveform is minimized.

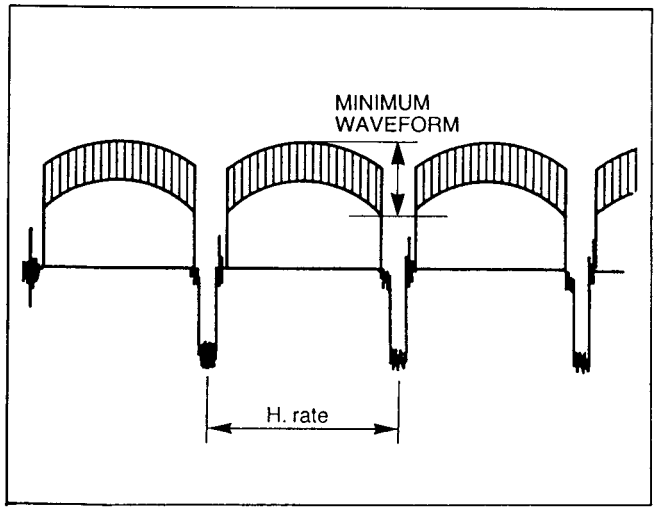

Fig. C28

15-3. HIGH COLOUR TEMPERATURE ADJUSTMENT

TP	ADJ.	LENS CAP	CCHART
VIDEO OUTPUT	VR101, VR102	NO	WHITE CHART

M.EQ.	SPEC.
VECTORSCOPE	CENTER OF VECTORSCOPE
OSCILLOSCOPE	WAVEFORM IS MINIMIZED

Note:
VR101, VR102 : Process C.B.A.
When this adjustment is performed, previous items 15-1 and 15-2 must be completed.

WITH VECTORSCOPE
(1) Aim the camera at the white chart using a 3200 degrees K Halogen lamp .
(2) Supply the video signal to the vectorscope.
(3) Attach the colour temperature conversion filters (VFK0374 and VFK0375) which convert 3200 degrees Kelvin to 5800 degrees Kelvin in front of the Lens and AWT Sensor. (Refer to Note 1 of item. 15-3).
(4) If the colour temperature conversion filters are not available, use a day light source. (Rfer to Note 2 of item. 15-3)
(5) Adjust the Colour Temperature Clip Controls (VR101 and VR102) so that the colour vectors collect at the contre of screen on the vectorscope.

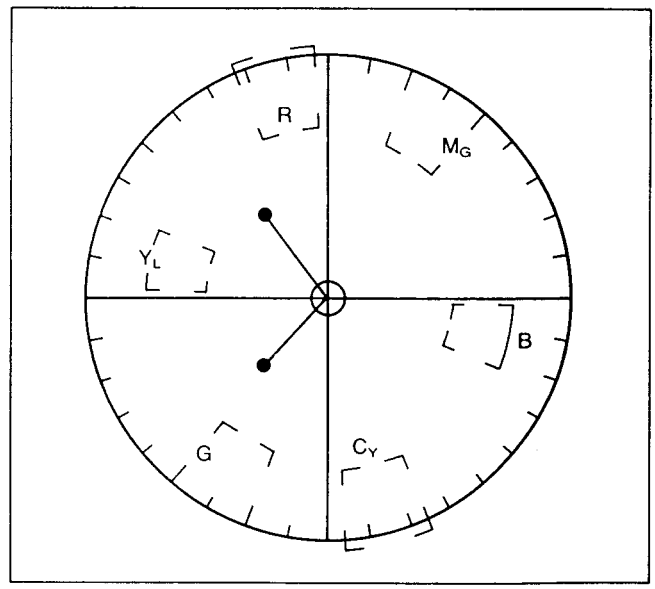

Fig. C29

WITH OSCILLOSCOPE
(1) Adjustment condition and procedure are same as using vectorscope.
(2) Adjust VR101 and VR102 so that the waveform is minimized.

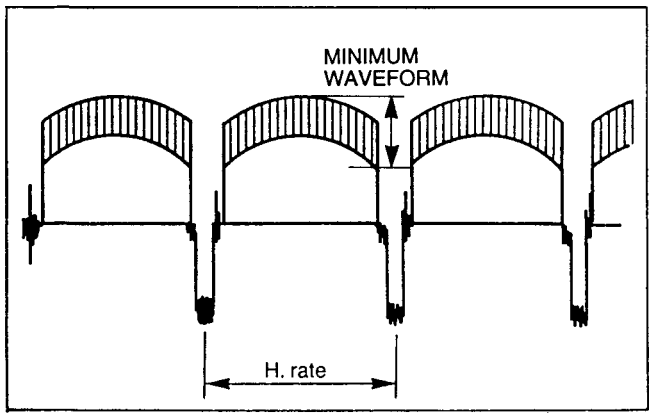

Fig. 30

Note 1:
Attach the fixture to the Lens, then attach the colour temperature conversion filter to fixture. It can be procured at a Camera Store. Please construct the fixture using the sheet attached to inside cover page at the back of the Service Manual. (Refer to Fig. C31.)

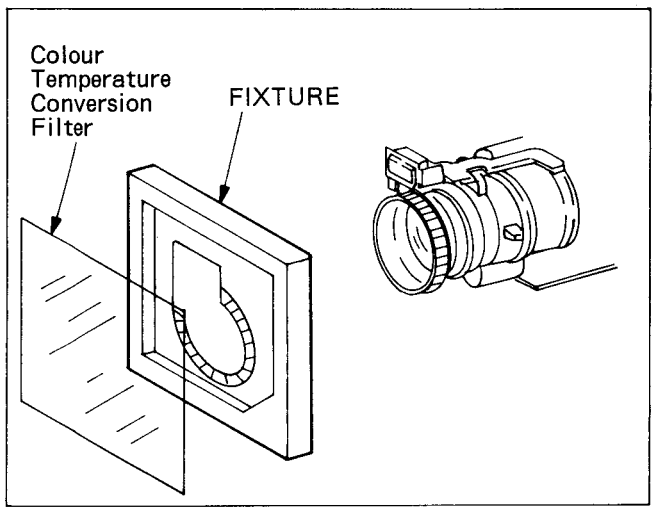

Fig. C31

Note 2:
(1) Aim the camera at a sunny outdoor source (window, etc.).
(2) Incoming light must be from an outdoor source only; source and illumination on the sensor must be more than 500Lx, and colour temperature must be within 5000 degrees –6000 degrees Kelvin.
(Refer to Fig. C26.)

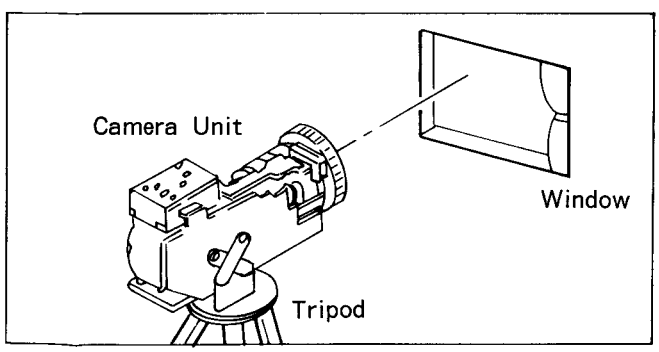

Fig. C32

AUTO FOCUS SECTION

PREPARATION

The following adjustments are for the Auto Focus Unit.

(1) Camera zoom is positioned at the end of TELE side.

16. AF GATE ADJUSTMENT

TP	ADJ.	IRIS CAP	CHART
TP602, TP603	C656	NO	
M.EQ.		SPEC.	
OSCILLOSCOPE		1T = 9.6 +– 0.4u–sec.	

Note:
TP602, TP603, C656 : AF C.B.A.

(1) Set the AF Gate Control (C656) as shown in Fig. C33

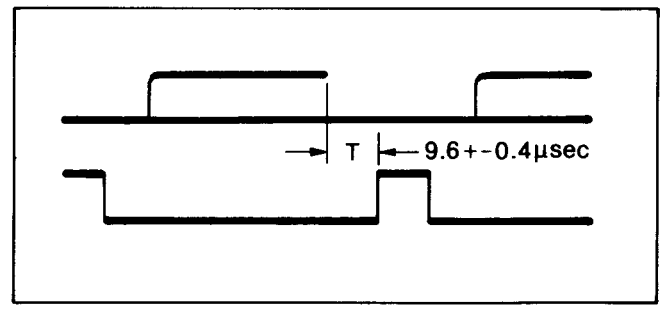

Fig. C33

17. BIMOLF GAIN CONTROL ADJUSTMENT

TP	ADJ.	LENS CAP	CHART
TP604	VR603	YES	
M.EQ.		SPEC.	
OSCILLOSCOPE		A = 16V +– 0.5Vp–p	

Note:
TP604, VR603 : AF C.B.A.

(1) Set the Focus Switch to the MANUAL position.
(2) Cover the camera lens with the lens cap.
(3) Connect the scope to the TP604.
(4) Adjust the Bimolf Gain Control (VR603) so that the signal level (A) is 16V +- 0.5Vp-p.

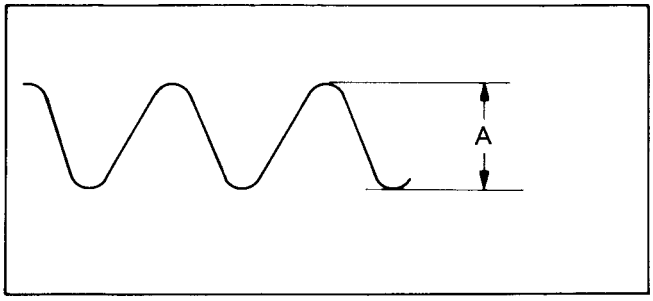

Fig. C34

18. AF AMP BIAS GAIN ADJUSTMENT

TP	ADJ.	LENS CAP	CHART
TP3, TP9, TP10, TP11	VR601, VR602	NO	GRAY SCALE CHART
M.EQ.	SPEC.		
D.V.M.	----------		

Note:
TP3, TP9, TP10, TP11 : Process C.B.A.
VR601, VR602 : AF C.B.A.

(1) Connect a jumper wire between TP3 and TP10.
(2) Adjust the AF AMP BIAS Control (VR601) so that the voltage level at TP9 is 1.74V +- 0.02V.
(3) Disconnect the jumper wire between TP3 and TP10.
(4) Next, connect a jumper wire between TP10 and TP11.
(5) Adjust the AF AMP Gain Control (VR602) so that the voltage Level of TP9 is 3.72V +- 0.05V.
(6) Disconnect the jumper wire between TP10 and TP11.
(7) Next, confirm the voltage level at TP9 by connecting a jumper wire between TP3 and TP10.
(8) If the voltage level at TP9 is not 1.74V +- 0.02V, repeat steps (1) - (6).

TP	ADJ.	LENS CAP	CHART
	DEFLECTION YOKE CENTERING MAGNET	NO	BALL CHART
M.EQ.	SPEC.		
MONITOR TV	CENTER THE PICTURE		

19. AF VH FREQUENCY ADJUSTMENT

TP	ADJ.	IRIS CAP	CHART
TP605	C621	NO	WHITE/GRAY CHART
M.EQ.	SPEC.		
OSCILOSCOPE	A = 1.0 +- 0.04Vp-p		

Note:
TP605, TP611, C621 : AF C.B.A.

Zoom : TELE Side
Focus: AUTO

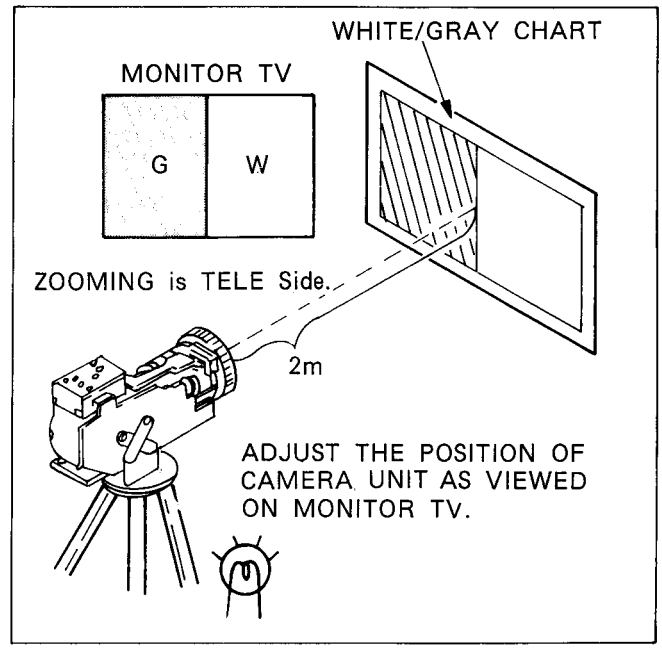

Fig. C35

(1) Aim the Camera at the White/Gray Chart attached to inside of this Service Manual.
(2) Confirm that the voltage at TP611 is 2.2V +- 0.1V.
(3) If the Voltage at TP611 is not 2.2V +- 0.1V, adjust the light source so that the voltage at TP611 is 2.2V +- 0.1V.
(4) Adjust the C621 so that the "A" level at TP605 is 1.0 +- 0.05Vp-p.

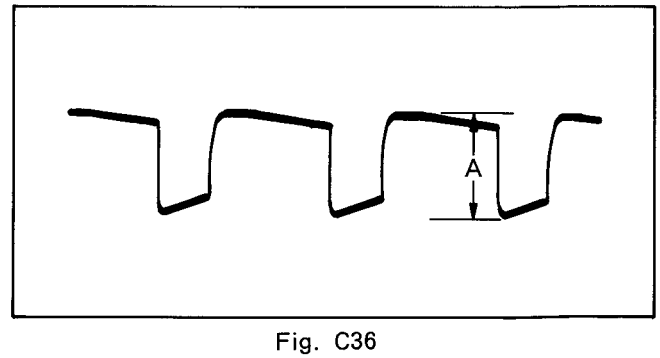

Fig. C36

2-4-2. ELECTRICAL ADJUSTMENT FOR E.V.F. SECTION

PREPARATION

The following adjustments are for the Electronic Viewfinder.

(1) Connect the Viewfinder plug to the E.V.F. connector on the unit.
(2) The camera circuit must be completely aligned before viewfinder adjustments are made.

1. H-OSC ADJUSTMENT

TP	ADJ.	LENS CAP	CHART
Pin2 of P701	VR702	NO	BALL CHART
M.EQ.		SPEC.	
FREQUENCY COUNTER		15.6KHz +- 0.1KHz	

Note:
P701, VR702 : E.V.F. C.B.A.

(1) Connect the scope to Pin2 of P701, use DC
(2) Adjust the H-OSC (VR702) so that the frequency is 15.8 +- 0.1 KHz.

2. CENTERING ADJUSTMENT

(1) Aim the camera at the registration chart.
(2) Adjust the Deflection Yoke Centering Magnets by turning them so that the picture on monitor TV is centered.

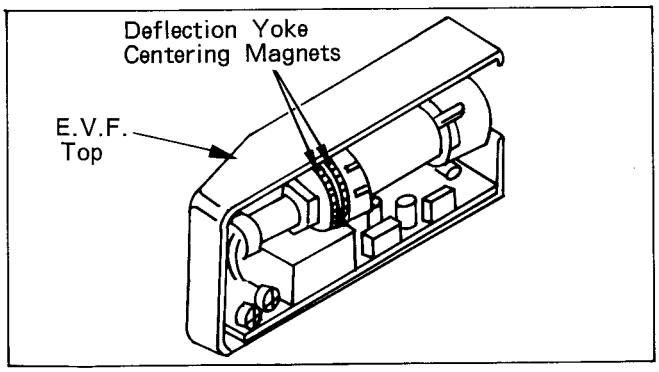

Fig. C39

3. FOCUS ADJUSTMENT

TP	ADJ.	LENS CAP	CHART
	VR704	NO	BALL CHART
M.EQ.		SPEC.	
VIEWFINDER		BEST RESOLUTIONON	

Note:
VR704 : E.V.F. C.B.A.

(1) Aim the camera at the Ball chart.
(2) Adjust the focus control (VR704) for best resolution in the viewfinder.

4. V.SIZE ADJUSTMENT

TP	ADJ.	LENS CAP	CHART
	VR701	NO	GRAY SCALE CHART
M.EQ.		SPEC.	
VIEWFINDER		VERTICAL SIZE IS FIXED.	

Note:
VR701 : E.V.F. C.B.A.

(1) Aim the camera at the gray scale chart.
(2) Adjust the Vertical Size (VR701) so the Vertical Size is correct and the picture does not roll as shown in Fig. C40.

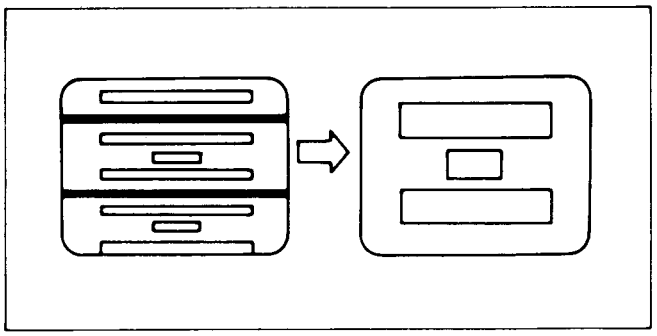

Fig. C40

5. BRIGHTNESS ADJUSTMENT

TP	ADJ.	LENS CAP	CHART
	VR705	NO	GRAY SCALE CHART
M.EQ.		SPEC.	
VIEWFINDER		NATURAL GRADATION	

Note:
VR705 : E.V.F. C.B.A.

(1) Aim the camera at the gray scale shart.
(2) Adjust the Brightness Control (VR705) so that the black and white Bars in the E.V.F. screen are the same as they are in the monitor TV screen.

LOCATION OF TEST POINTS & CONTROLS — Camera Section —

PROCESS C.B.A.

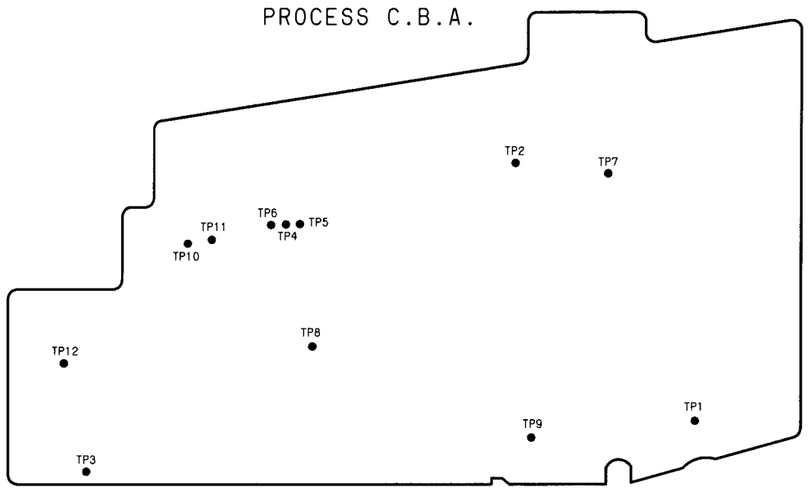

(COMPONENT SIDE)

PROCESS C.B.A.

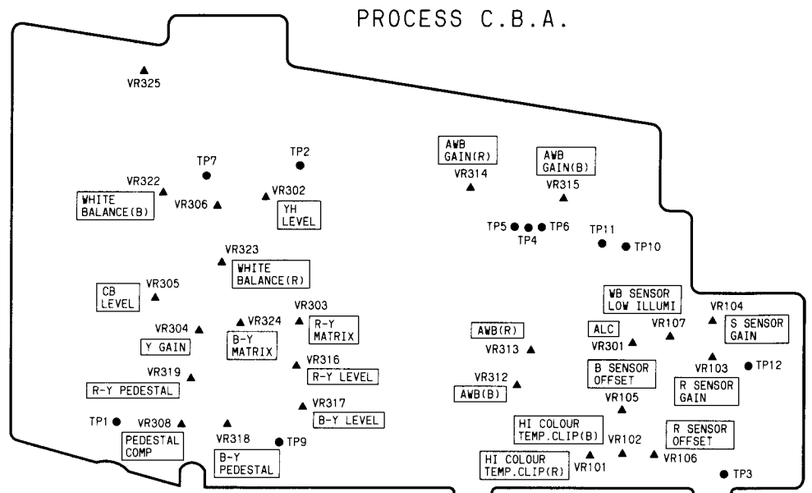

(FOIL SIDE)

SENSOR C.B.A.

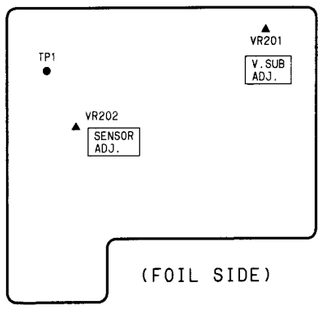

(FOIL SIDE)

SENSOR C.B.A.

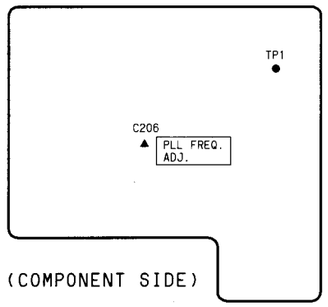

(COMPONENT SIDE)

AUTO FOCUS C.B.A.

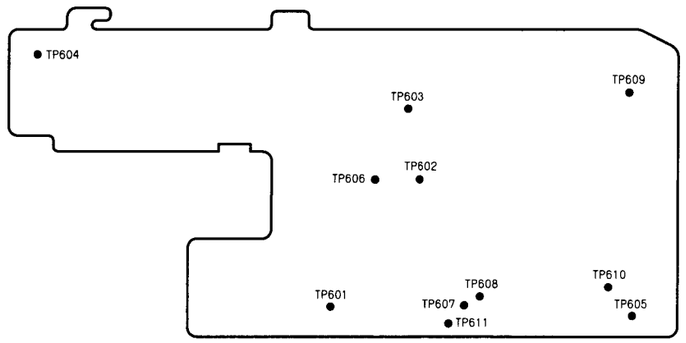

(COMPONENT SIDE)

AUTO FOCUS C.B.A.

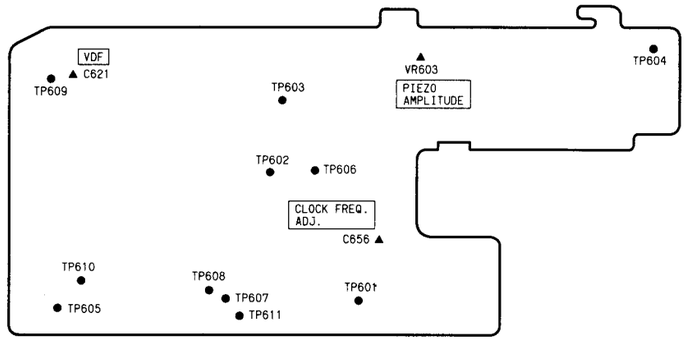

(FOIL SIDE)

E.V.F. C.B.A.

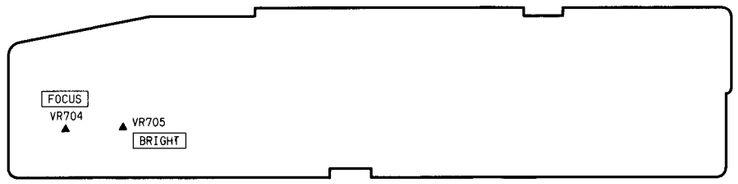

(COMPONENT SIDE)

E.V.F. C.B.A.

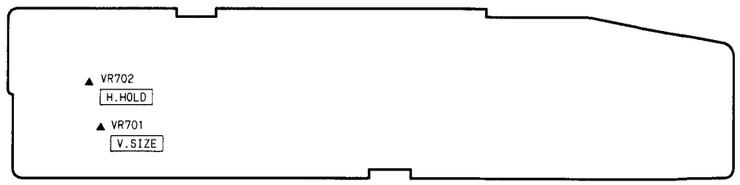

(FOIL SIDE)

LOCATION OF TEST POINTS & CONTROLS — VTR Section —

MAIN C.B.A.

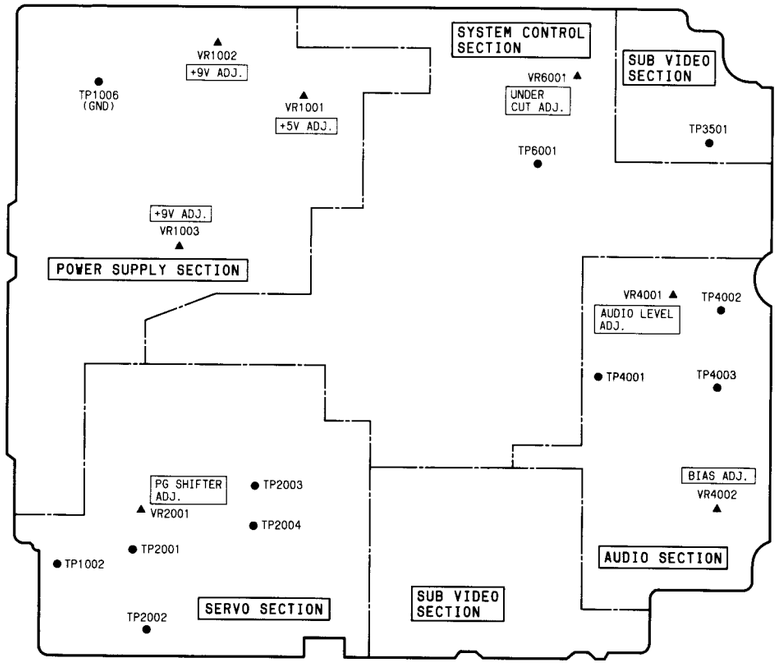

(FOIL SIDE)

MAIN C.B.A.

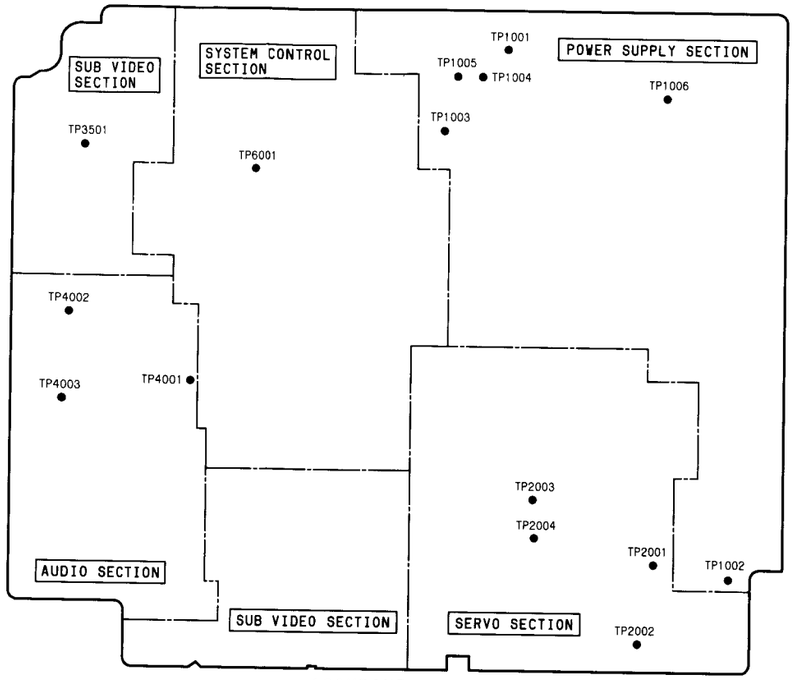

(COMPONENT SIDE)

LUMINANCE/CHROMINANCE C.B.A.

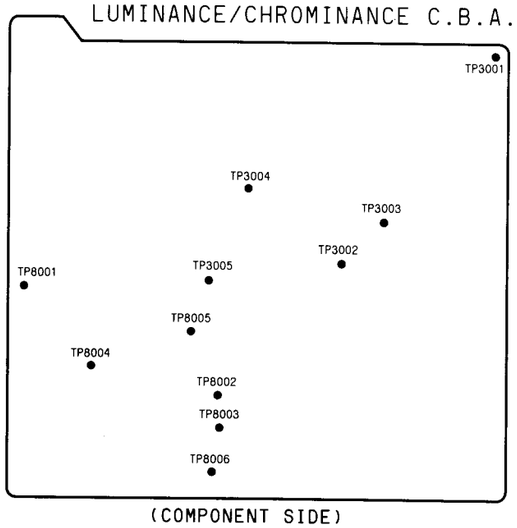

(COMPONENT SIDE)

LUMINANCE/CHROMINANCE C.B.A.

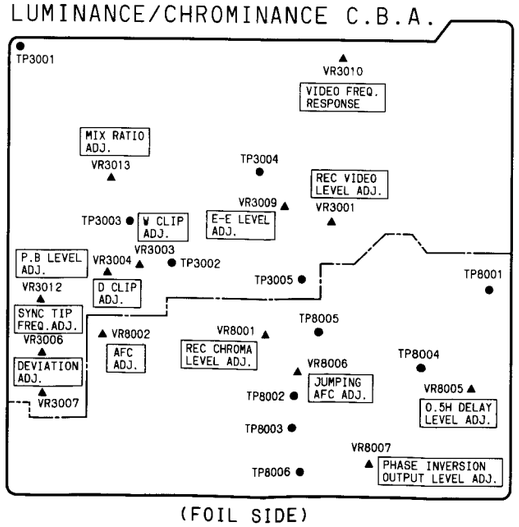

(FOIL SIDE)

2-4-3. ELECTRICAL ADJUSTMENT FOR VTR SECTION

TEST EQUIPMWNT AND TOOLS

The following equipment is required for adjustment of the VTR section of VHS-C Movie

1. D.V.M (Digital Volt Meter)
   Voltage Range : 0.001 ~ 50V
2. Dual Trace Oscilloscope
   Voltage Range : 0.005 ~ 50V/div.
   Frequency Range : DC ~ 10MHz
   Probe : 10 : 1 or 1 : 1
3. Frequency Counter.
   Frequency Range :
4. Signal Generator (Sinewave)
   Frequency Range : 0 ~ 10MHz
5. Video Sweep Generator
   Frequency Range : 0 ~ 10MHz
6. AC Millivolt Meter
   Voltage Range : 0 ~ 1Vrms.
7. Plastic Tip Driver
8. VHS-C Alignment Tape (VMF8180H3PF)
9. Y/C Separator (VFK0304)
10. Extension Cable
    W16pin Extention Cable (VFK0429)
    W20pin Extention Cable (VFKS0067)
    4pin Extention Cable (VFKS0068) ---- 2pcs.
    14pin Flexible Cable (VFK0430)
    Y/C Separator Connection Cable (VFKS0074)

POWER SECTION

1. REG.+5V DC ADJUSTMENT
2. REG.+9V DC ADJUSTMENT
3. CAMERA REG.+9V DC ADJUSTMENT

SERVO SECTION

4. PG SHIFTER ADJUSTMENT

VIDEO SECTION

5. E-E LEVEL ADJUSTMENT
6. SYNC TIP FREQUENCY ADJUSTMENT
7. DEVIATION ADJUSTMENT
8. WHITE AND DARK CLIP ADJUSTMENT
9. REC CHROMA LEVEL ADJUSTMENT
10. REC VIDEO LEVEL ADJUSTMENT
11. AFC ADJUSTMENT

12. MIX RATIO ADJUSTMENT

13. PLAY BACK LEVEL ADJUSTMENT

14. VIDEO FREQUENCY RESPONCE

15. 0.5H DELAY LEVEL ADJUSTMENT

16. JUMPING AFC ADJUSTMENT

17. PHASE ANVERSION OUTPUT LEVEL ADJUSTMENT

AUDIO SECTION

18. AUDIO BIAS CURRENT ADJUSTMENT

19. AUDIO PLAYBACK LEVEL ADJUSTMENT

SYSTEM CONTROL SECTION

20. UNDER CUT ADJUSTMENT

POWER SECTION

1. REG.+5V DC ADJUSTMENT

TP	ADJ.	MODE	INPUT
TP1001	VR1001	CAMRA REC	10.5+−0.5V DC (To DC Jack by DC Power Supply)
TAPE	M.EQ.	SPEC.	
BLANK TAPE	DC Power Supply D.V.M.	4.91+−0.025V	

Condition :
Do not connect AC Adaptor. Connect a DC Power Supply to DC Jack + (+) and GND (−), then supply the voltage 10.5+−0.5V

2. REG.+9V DC ADJUSTMENT

TP	ADJ.	MODE	INPUT
TP1002	VR1002	CAMRA REC	9.6+−0.5V DC (To DC Jack by AC Adaptor)
TAPE	M.EQ.	SPEC.	
BLANK TAPE	D.V.M.	8.7+−0.05V	

Condition :
Befor this adjustment, "REG. +5V DC ADJUSTMENT" must be completed.
Do not connect AC Adaptor. Connect a DC Power Supply to DC Jack + (+) and GND (−), then supply the voltage 9.6+−0.5V

3. CAMERA REG.+9V DC ADJUSTMENT

TP	ADJ.	MODE	INPUT
TP1003	VR1003	CAMERA REC	9.6+−0.5V DC (To DC Jack by AC Adaptor)
TAPE	M.EQ.	SPEC.	
BLANK TAPE	D.V.M.	8.6+0.07V−0.03V	

Confirm the following voltages
TP1004 --- 15.2+−0.3V
TP1005 --- −7.7+−0.3V
Condieion :
Befor this adjustment, "REG. +9V DC ADJUSTMENT" must be completed.
Do not connect AC Adaptor. Connect a DC Power Supply to DC Jack + (+) and GND (−), then supply the voltage 9.6+−0.5V

SERVO SECTION

4. PG SHIFTER ADJUSTMENT

TP	ADJ.	MODE	INPUT
TP2001 LINE OUT	VR2001	SP MODE PLAY BACK	
TAPE	M.EQ.	SPEC.	
ALIGNMENT TAPE (VFM8180H3PF)	OSCILLO SCOPE	T=6.5+−0.5H (0.42+−0.03msec)	

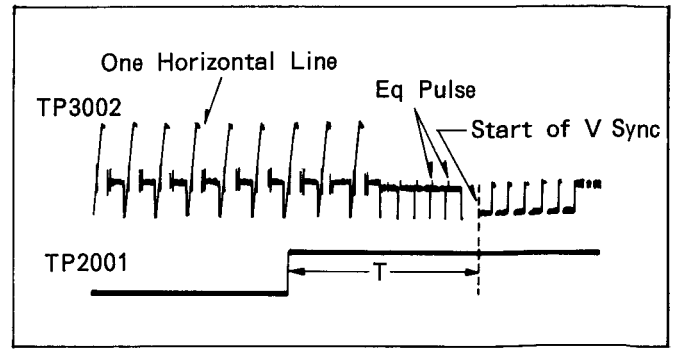

Fig. E1

VIDEO SECTION

5. E-E LEVEL ADJUSTMENT

TP	ADJ.	MODE	INPUT
LINE OUT	VR3009	STOP	COLOUR BAR

TAPE	M.EQ.	SPEC.
	OSCILLOSCOPE	A=2.0+-0.1Vpp

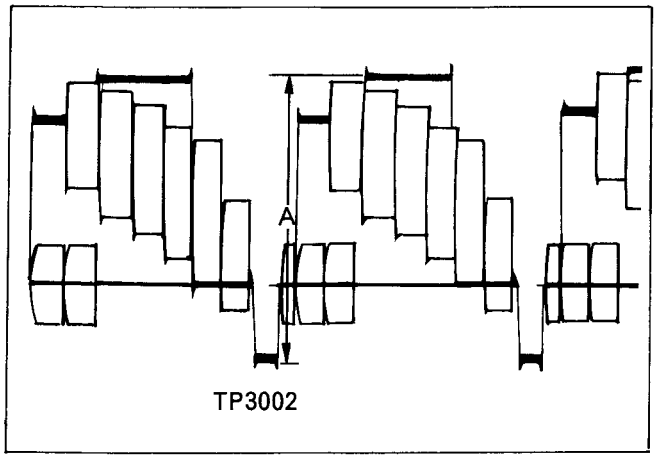

Fig. E2

6. SYNC TIP FREQUENCY ADJUSTMENT

TP	ADJ.	MODE	INPUT
TP3002	VR3006	SP MODE RECOR-DING	NO SIGNAL

TAPE	M.EQ.	SPEC.
BLANK TAPE	FREQUENCY COUNTER	3.9MHz+-50KHz

7. DEVIATION ADJUSTMENT

TP	ADJ.	MODE	INPUT
Pin 2 of P5503 (HOT) Pin 1 of P5503 (GND) (TRIGGER TP2001)	VR3007	SP MODE RECOR-DING	COLOUR BAR

TAPE	M.EM.EQ.	SPEC SPEC.
BLANK TAPE	SIGNAL GENERATOR OSCILLOSCOPE FREQUENCY COUNTER	INNER BEAT IS MAXIMUM.

(1) Connect a signal generator (sinewave) to TP3002 through a resistor (1Kohm).
Set the frequency and the output level of the signal generator.
Frequency : 4.9MHz +- 50KHz
Output level : 0.1Vp-p
(2) Connect the probe to TP3501 (HOT) on the Head Amp Unit throgh a resistor (1Kohm).
(3) Adjust VR3007 so that the inner beat at white prortion of colour bar becomes maximum.

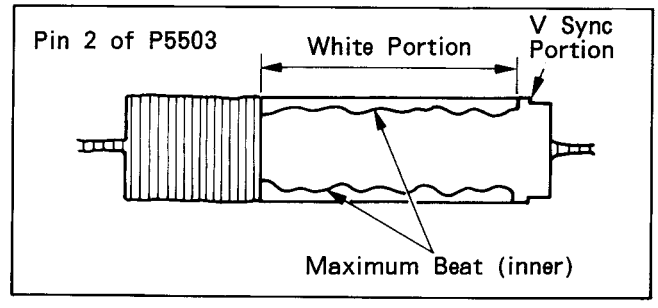

Fig. E3

(Misadjustment)

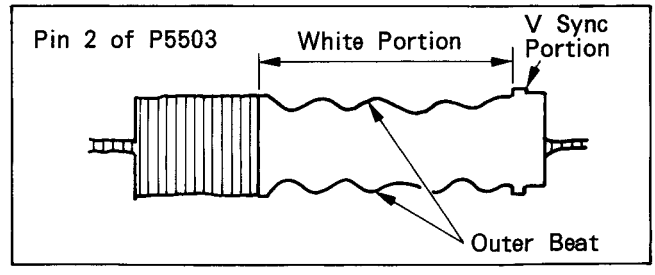

Fig. E4

8. WHITE AND DARK CLIP ADJUSTMENT

TP	ADJ.	MODE	INPUT
TP3003	VR3003: A (WHITE CLIP) VR3004: B (DARK CLIP)	STOP	COLOUR BAR

TAPE	M.EQ.	SPEC.
	OSCILLOSCOPE	A=184+-5% B=160+-5%

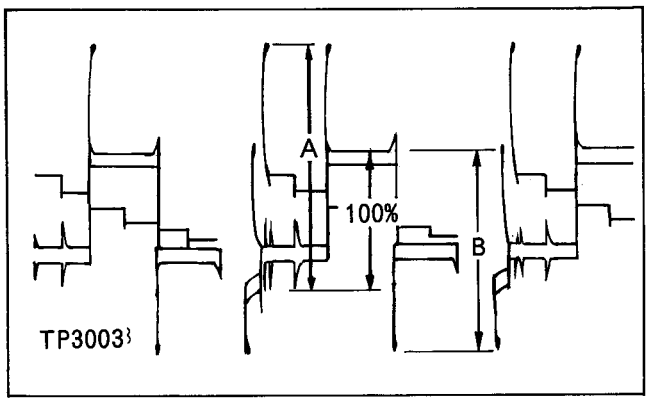

Fig. E5

9. REC CHROMA LEVEL ADJUSTMENT

TP	ADJ.	MODE	INPUT
Pin 2 of P5503 (HOT) Pin 1 of P5503 (GND)	VR8001	LP MODE RECOR-DING	COLOUR BAR

TAPE	M.EQ.	SPEC.
BLANK TAPE	OSCILLOSCOPE	A=28+-4mVp-p (CYAN)

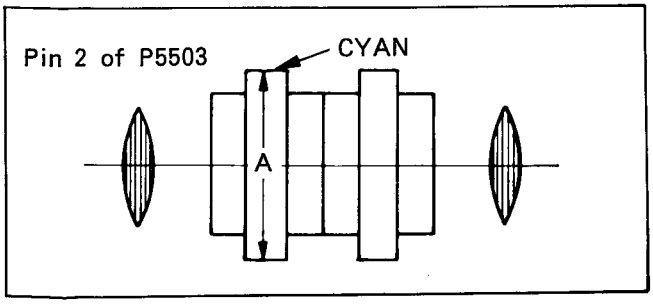

Fig. E6

Condition :
Connect TP3001 to GND.

10. REC VIDEO LEVEL ADJUSTMENT

TP	ADJ.	MODE	INPUT
Pin 2 of P5503 (HOT) Pin 1 of P5503 (GND)	VR3001	LP MODE RECOR-DING	COLOUR BAR

TAPE	MM.EQ.	SPEC.
BLANK TAPE	OSCILLO-SCOPE	A=120+-5mVp-p

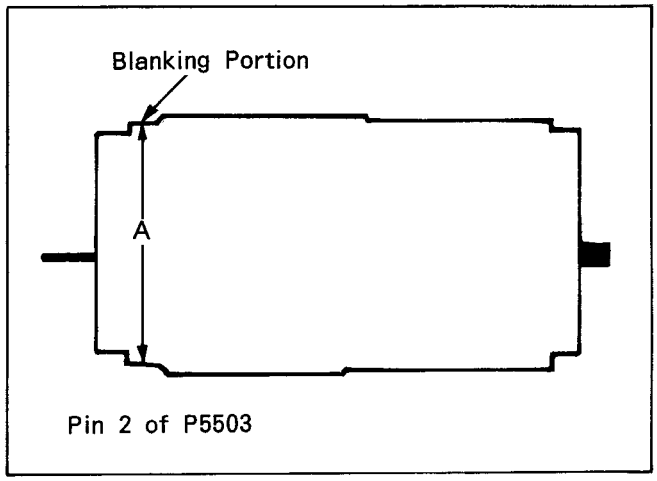

Fig. E7

11. AFC ADJUSTMENT

TP	ADJ.	MODE	INPUT
TP8006	VR8002	STOP	COLOUR BAR

TAPE	M.EQ.	SPEC.
	D.V.M.	2.44+-0.015V

12. MIX RATIO ADJUSTMENT

TP	ADJ.	MODE	INPUT
TP3004	VR3013	SP MODE SELF RECORDING AND PLAYBACK	COLOUR BAR
TAPE	M.EQ.		SPEC.
BLANK TAPE	OSILLOSCOPE		A=LESS THAN 16mVp-p 100KHz

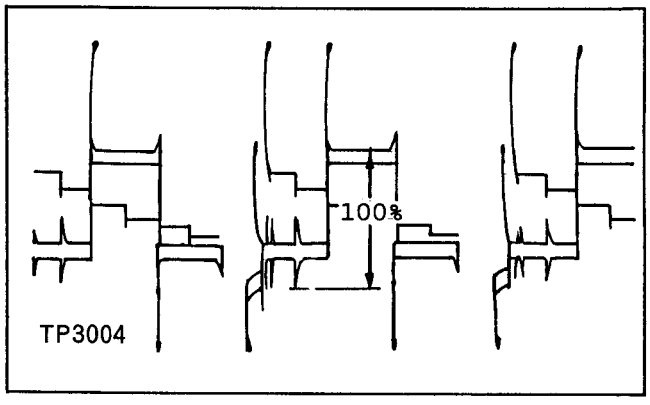

Fig. E8

13. PLAY BACK LEVEL ADJUSTMENT

TP	ADJ.	MODE	INPUT
LINE OUT	VR3012	SP MODE SELF RECORDING AND PLAYBACK	COLOUR BAR
TAPE	M.EQ.		SPEC.
BLANK TAPE	OSCILLO-SCOPE		A=1.0+-0.05Vp-p, B=0.5+-0.15Vp-p

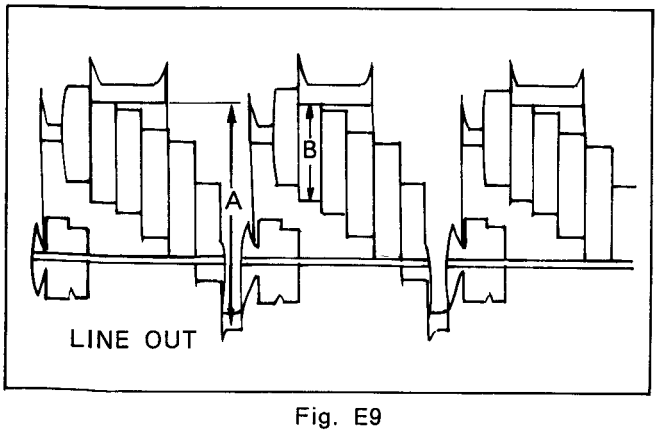

Fig. E9

14. VIDEO FREQUENCY RESPONCE ADJUSTMENT

TP	ADJ.	MODE	INPUT
LINE OUT	VR3010	SP MODE SELF RECORDING AND PLAYBACK	RF SWEEP SIGNAL
TAPE	M.EQ.		SPEC.
BLANK TAPE	VIDEO SWEEP GEN. OSCILLOSCOPE		A:B=0dB (A=B)

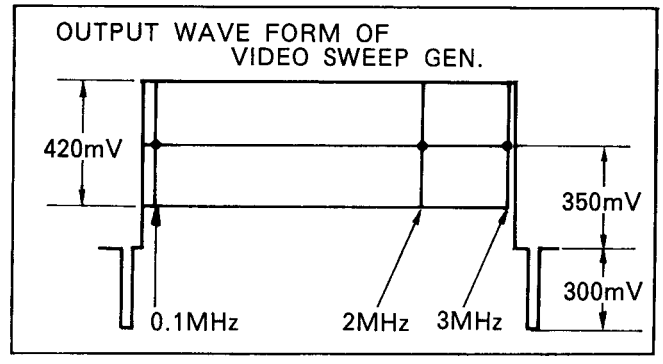

Fig. E10

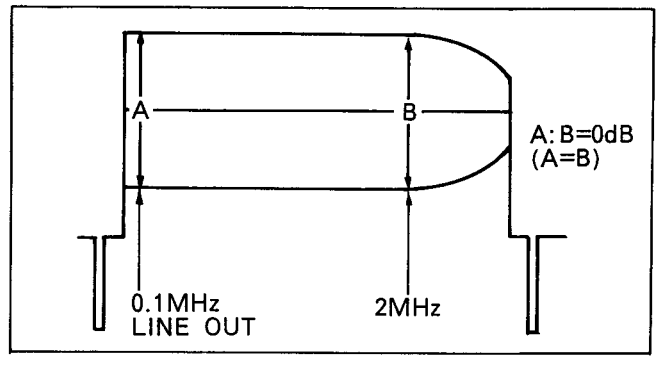

Fig. E11

15. 0.5H DELAY LEVEL ADJUSTMENT

TP	ADJ.	MODE	INPUT
TP8001	VR8005	LP MODE SELF RECORDING AND PLAYBACK	COLOUR BAR
TAPE	M.EQ.		SPEC.
BLANK TAPE	OSCILLOSCOPE		A=2.0+- 0.1Vp-p

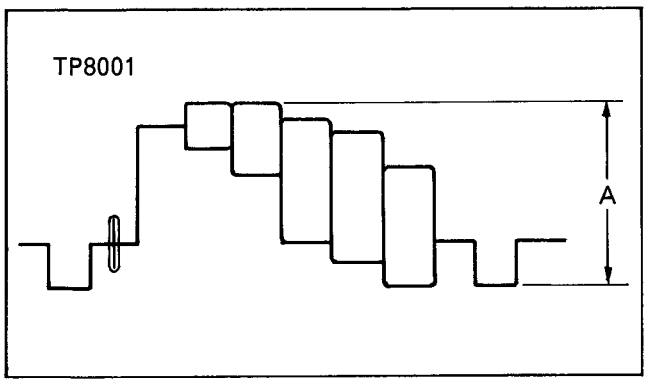

Fig. E12

16. JUMPING AFC ADJUSTMENT

TP	ADJ.	MODE	INPUT
TP8003	VR8006	LP MODE PLAYBACK	
TAPE	M.EQ.		SPEC.
BLANK (NON-RECORDED)	FREQUENCY COUNTER		22.2KHz+- 100Hz

Condition :
Make short jumper between pin14 of P3001 and TPB8002through 10Kohm resistor.

17. PHASE ANVERSION OUTPUT LEVEL ADJUSTMENT

TP	ADJ.	MODE	INPUT
LINE OUT	VR8007	LP MODE SELF RECORDING AND PLAYBACK	COLOUR BAR
TAPE	M.EQ..		SPEC.
BLANK TAPE	OSCILLOSCOPE VIDEO PATTERN GEN.		A-B=0+- 30mVp-p

(1) Connect the oscilloscope at LINE OUT and read A as the peak to peak level.
(2) Connect TP8004 and TP8005 to the GND and read B as the peak to peak level.
(3) Adjust VR8007 so that A-B becomes 0 +- 30mVp-p.

AUDIO SECTION

18. AUDIO BIAS CURRENT ADJUSTMENT

TP	ADJ.	MODE	INPUT
TP4002 (HOT) TP4003 (GND)	VR4002	SP MODE RECORDING	NO SIGNAL
TAPE	M.EQ.		SPEC.
BLANK TAPE	OSCILLOSCOPE or AC MILLIVOLT METER		7. +-0. mVp-p or 2.7+-0.1mVrms

19. AUDIO PLAYBACK LEVEL ADJUSTMENT

TP	ADJ.	MODE	INPUT
TP4001	VR4001	SP MODE SELF RECORDING AND PLAYBACK	(AUDIO MIC IN) 1KHz, -60dB
TAPE	M.EQ.		SPEC.
BLANK TAPE	SIGNAL GENERATOR AC MILLIVOLT METER or OSCILLOSCOPE		-8+-1dB

SYSTEM CONTROL SECTION

20. UNDER CUT ADJUSTMENT

TP	ADJ.	MODE	INNPUT
TP6001	VR6001	CAMERA RECORDING	8.8+-0.05V (To P1001)
TAPE	M.EQ.		SPEC.
	DC POWER SUPPLY UNIT D.V.M. OSCILLOSCOPE		

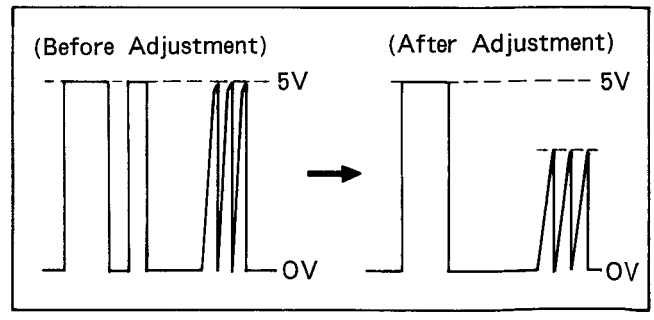

Fig. E13

Condition :
Do not connect AC Adaptor, Connect a DC Power Supply to pin1 (-) and Pin2 (+) of P1001, then supply the voltage 8.8 +- 0.05V DC.

SECTION 3
BLOCK DIAGRAMS & SCHEMATIC DIAGRAMS

3-1. OVERALL BLOCK DIAGRAM

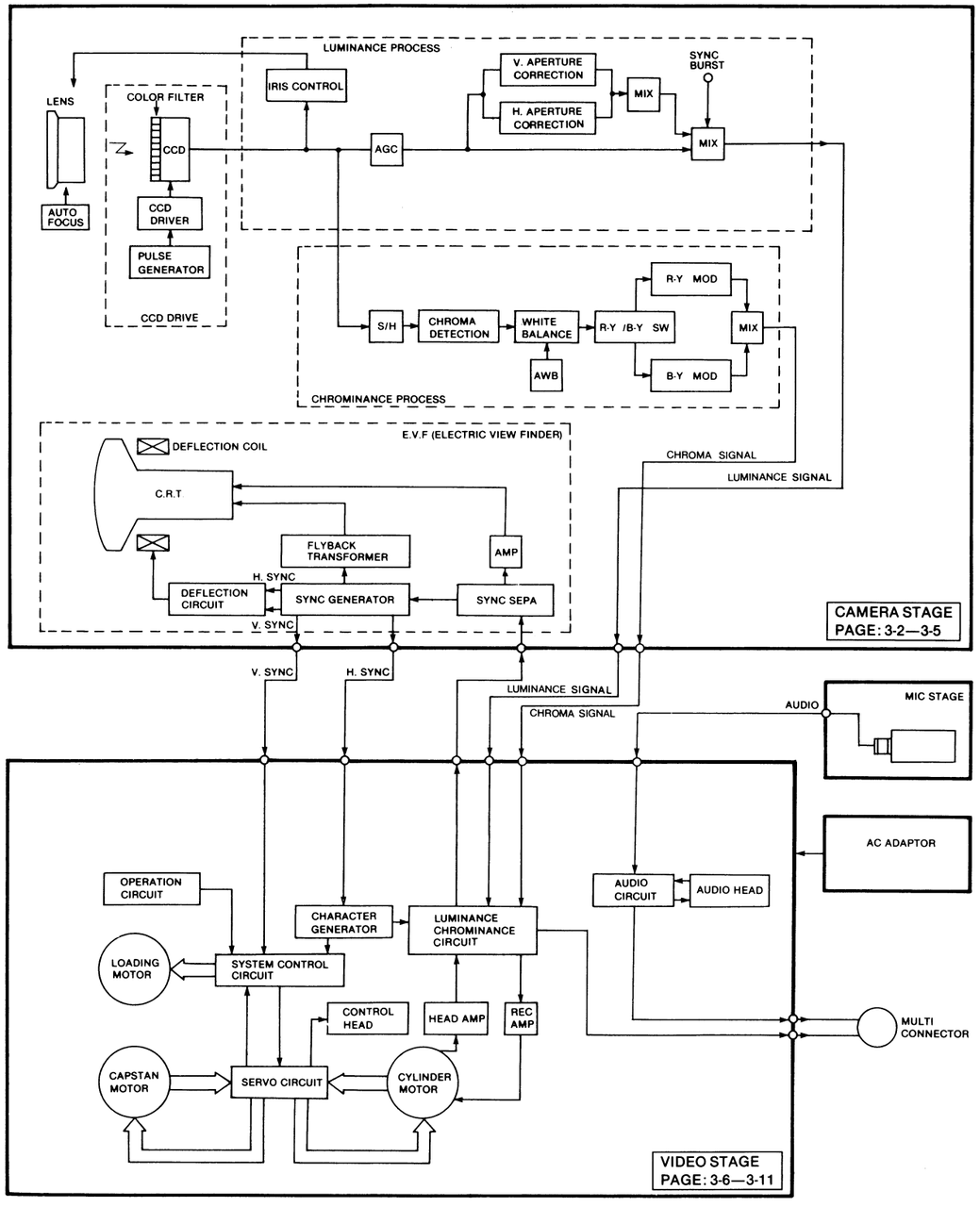

3-2. CAMERA PROCESS BLOCK DIAGRAM

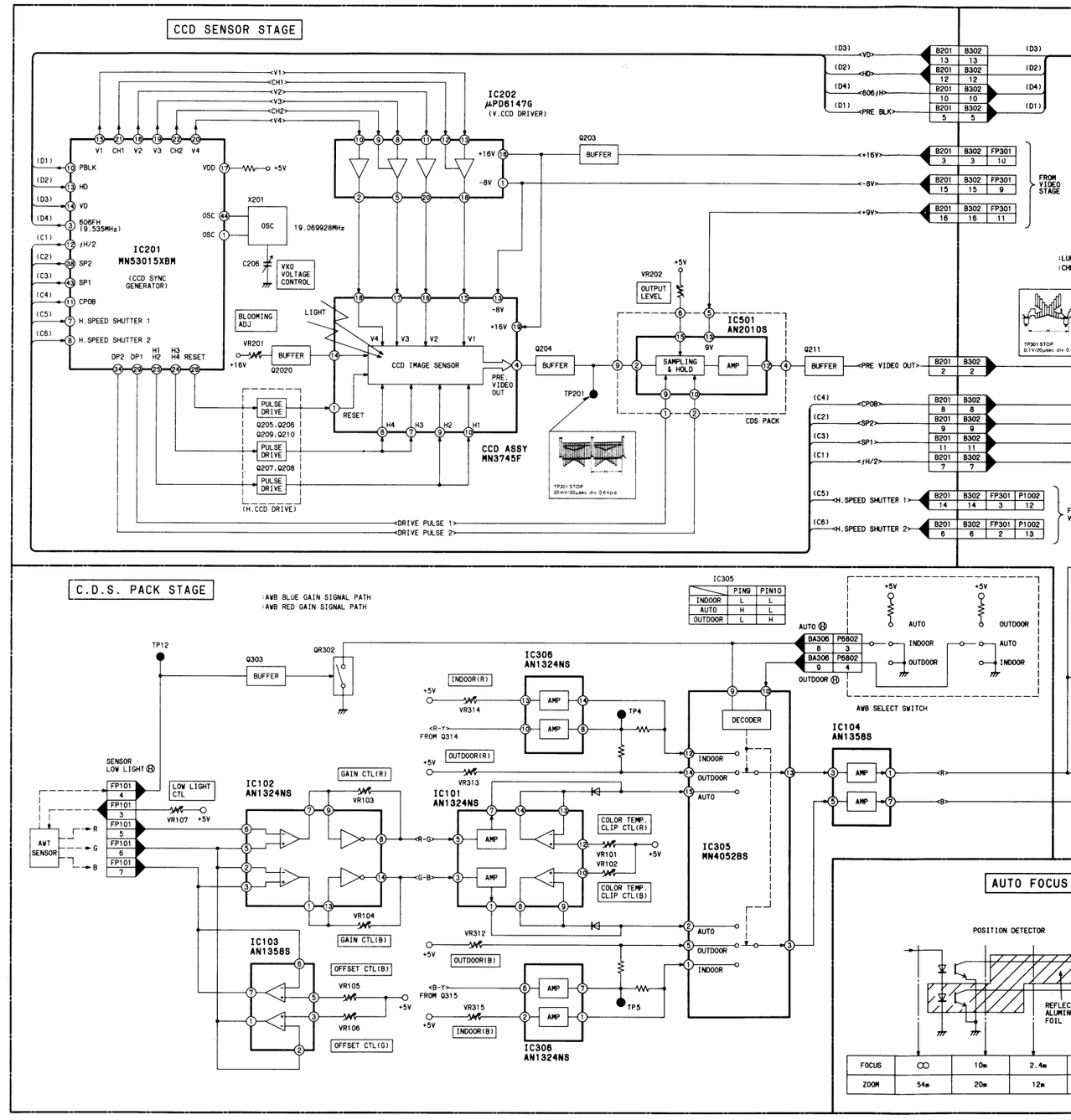

K DIAGRAM

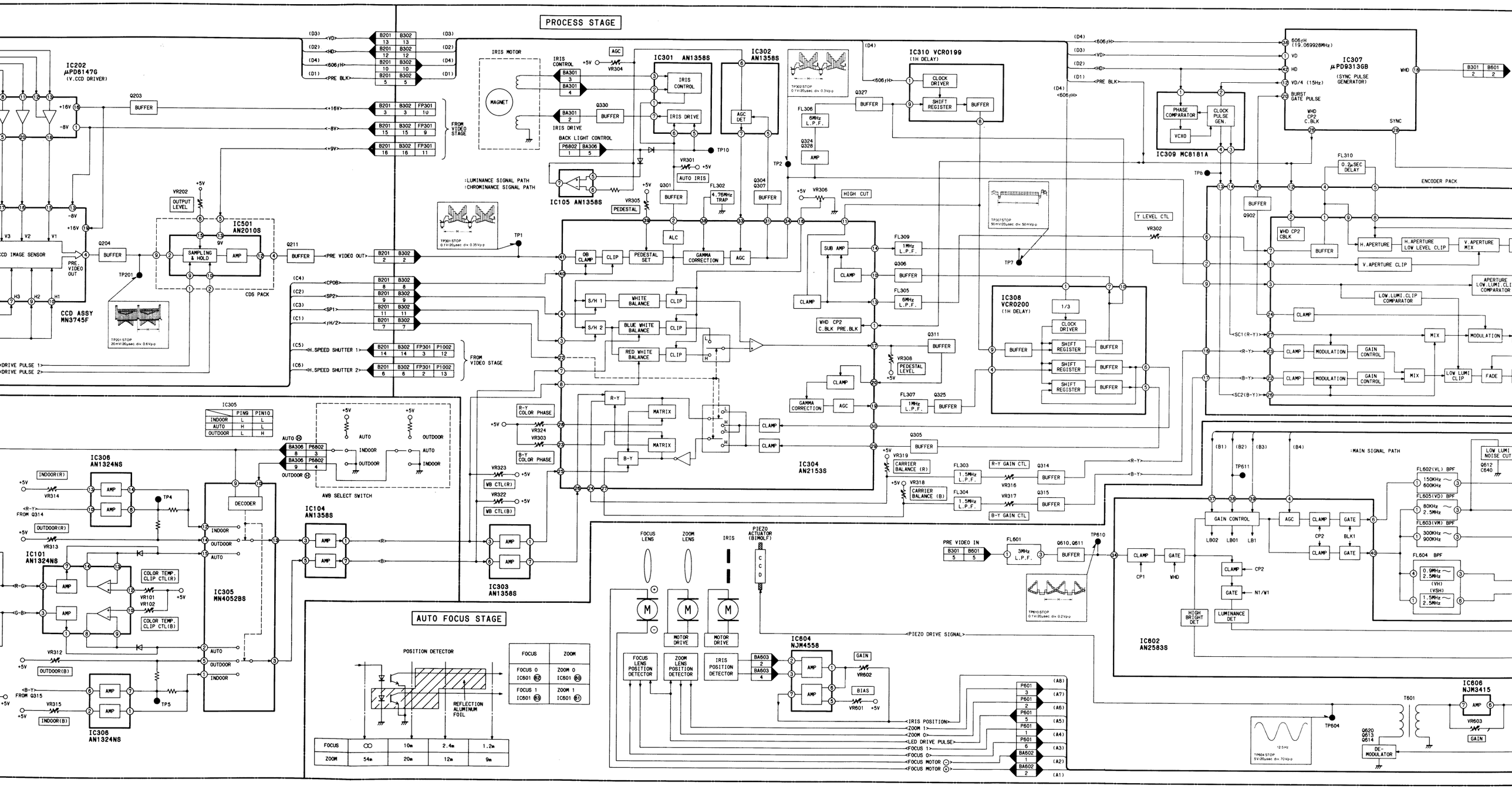

FOCUS	ZOOM
FOCUS 0 IC601 (62)	ZOOM 0 IC601 (60)
FOCUS 1 IC601 (63)	ZOOM 1 IC601 (61)

FOCUS	∞	10m	2.4m	1.2m
ZOOM	54m	20m	12m	9m

IC305	PIN9	PIN10
INDOOR	L	L
AUTO	H	L
OUTDOOR	L	H

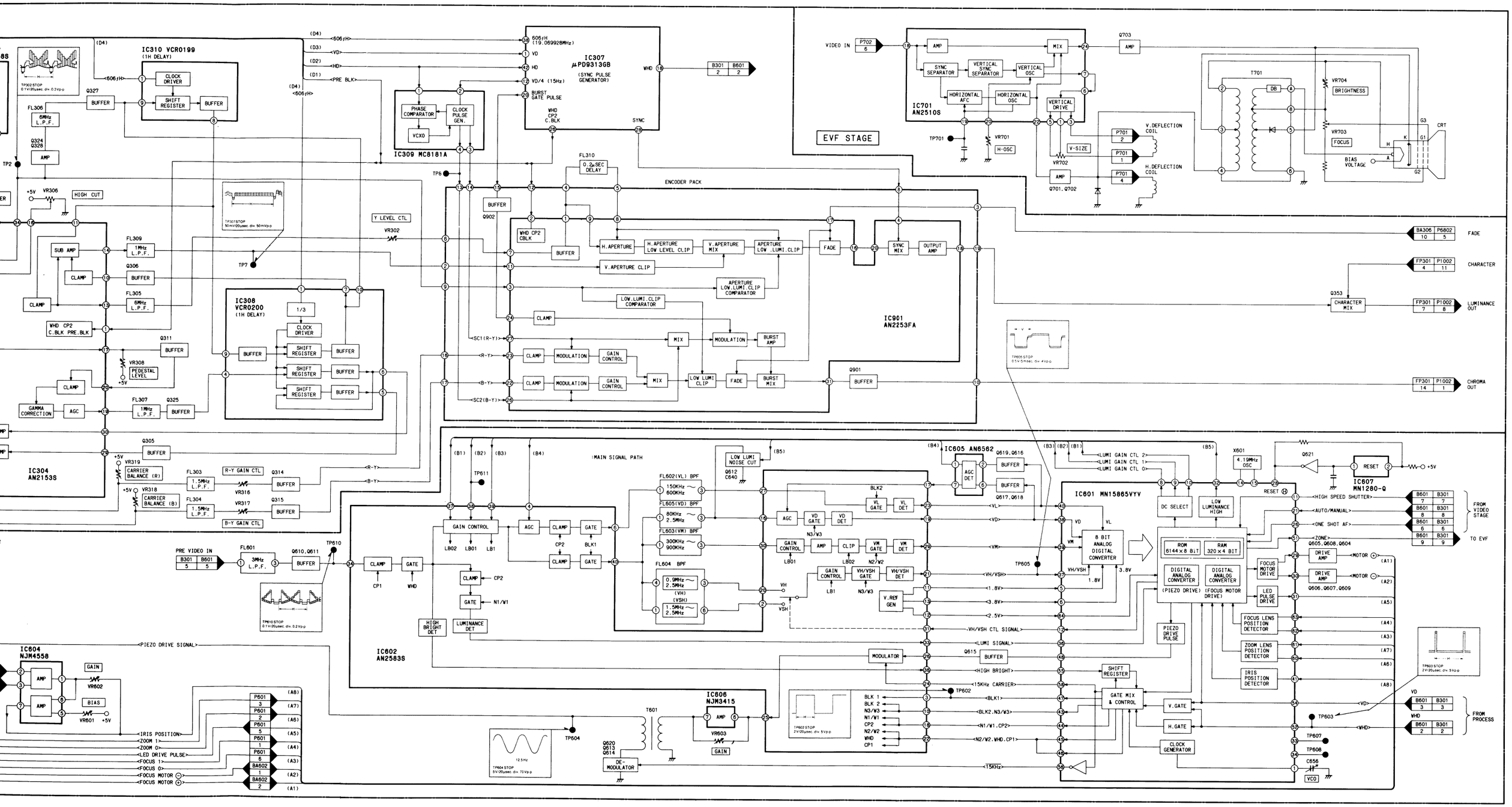

Next Page:
VIDEO RECODER PROCESS Section

3-3. VIDEO RECORDER PROCESS BLOCK DIAGRAM

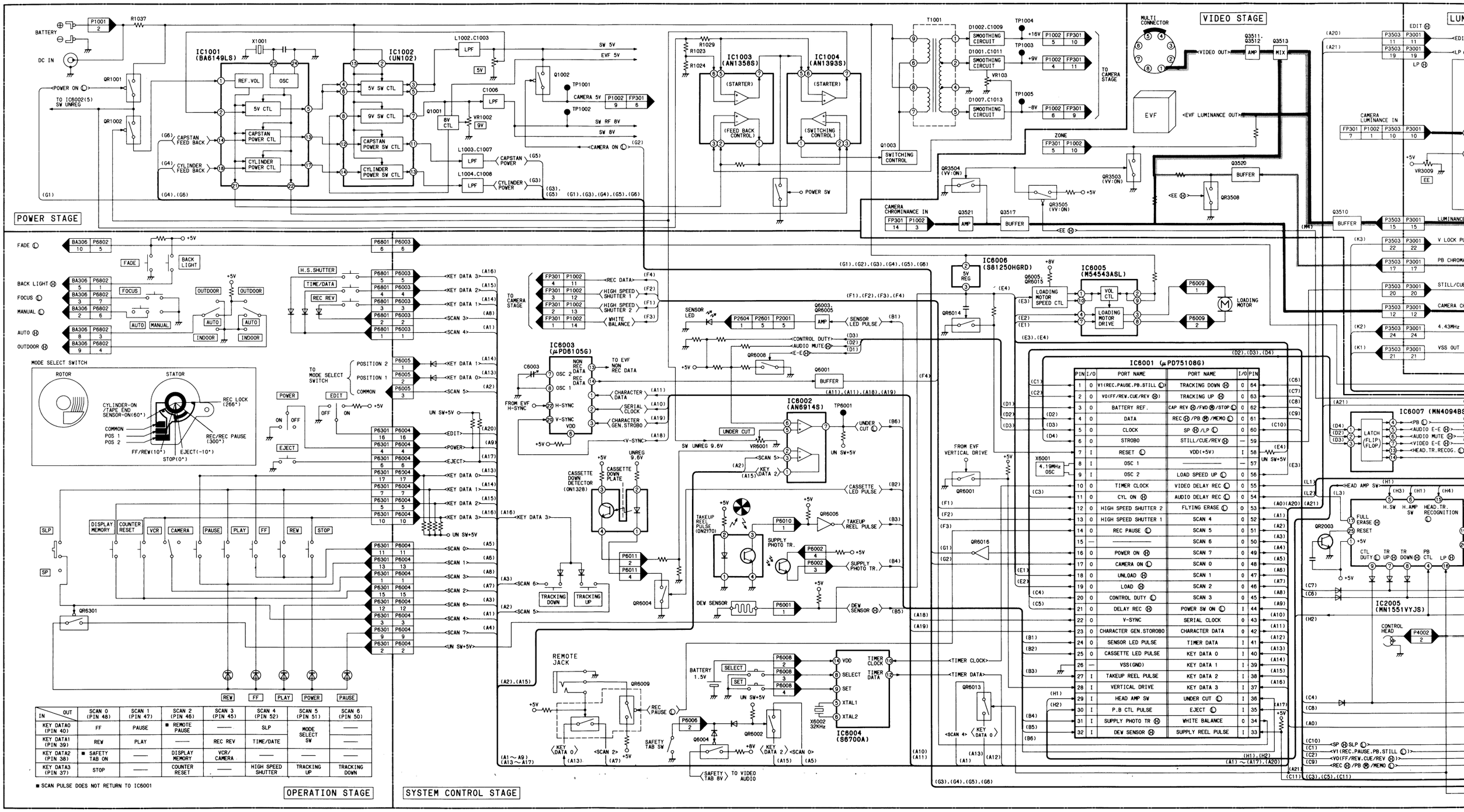

IN \ OUT	SCAN 0 (PIN 48)	SCAN 1 (PIN 47)	SCAN 2 (PIN 46)	SCAN 3 (PIN 45)	SCAN 4 (PIN 52)	SCAN 5 (PIN 51)	SCAN 6 (PIN 50)
KEY DATA0 (PIN 40)	FF	PAUSE	■ REMOTE PAUSE	——	SLP	MODE SELECT SW	——
KEY DATA1 (PIN 39)	REW	PLAY	——	REC REV	TIME/DATE		——
KEY DATA2 (PIN 38)	■ SAFETY TAB ON	——	DISPLAY MEMORY	VCR/ CAMERA	——	——	——
KEY DATA3 (PIN 37)	STOP	——	COUNTER RESET	——	HIGH SPEED SHUTTER	TRACKING UP	TRACKING DOWN

■ SCAN PULSE DOES NOT RETURN TO IC6001

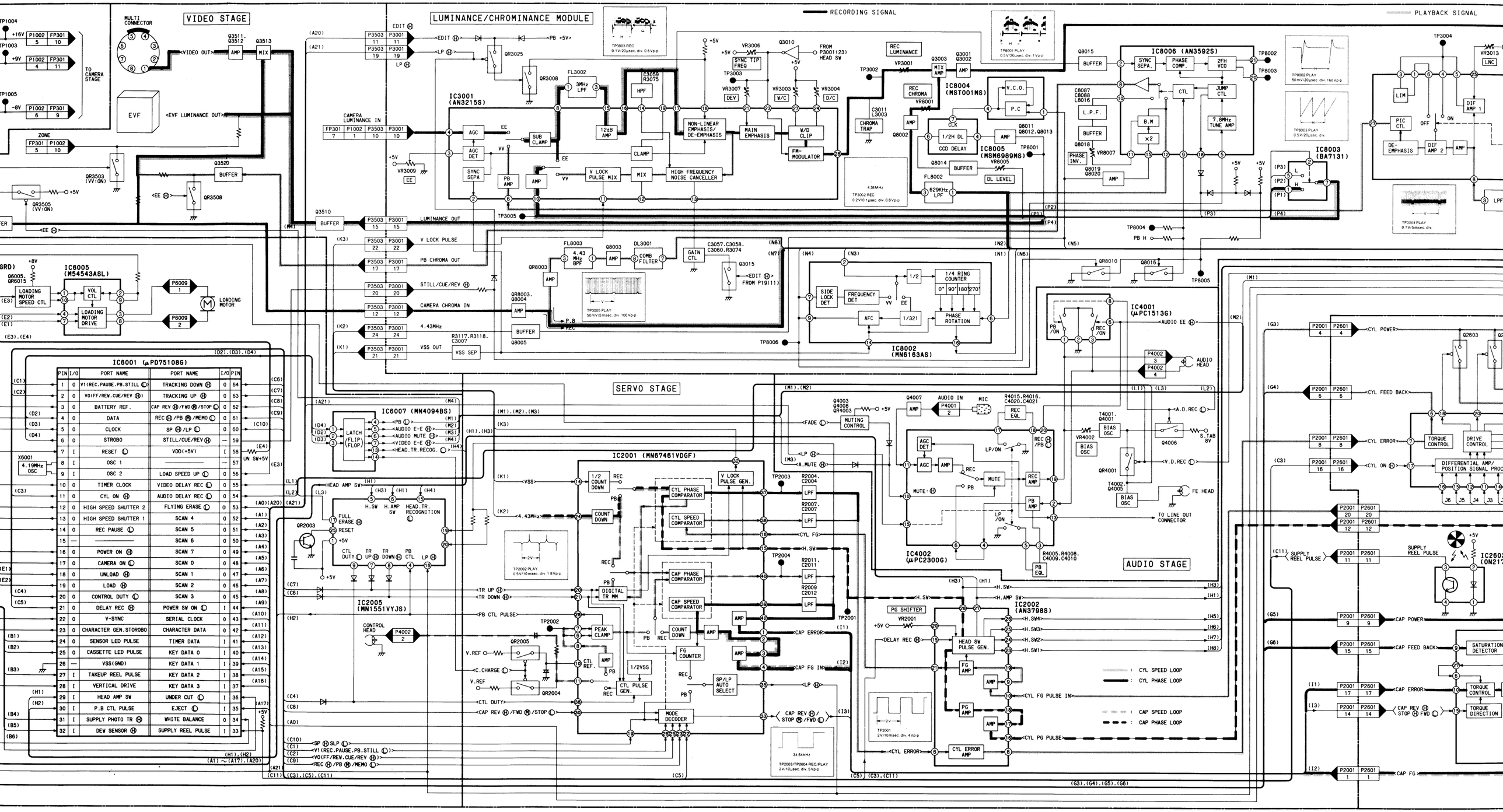

PIN	I/O	PORT NAME	PORT NAME	I/O	PIN
1	O	V1(REC.PAUSE.PB.STILL Ⓛ)	TRACKING DOWN Ⓗ	O	64
2	O	VO(FF/REW.CUE/REV Ⓗ)	TRACKING UP Ⓗ	O	63
3	O	BATTERY REF.	CAP REV Ⓗ/FWD Ⓗ/STOP Ⓛ	O	62
4	O	DATA	REC Ⓗ/PB Ⓗ/MEMO Ⓛ	O	61
5	O	CLOCK	SP Ⓗ/LP Ⓛ	O	60
6	O	STROBO	STILL/CUE/REV Ⓗ	—	59
7	I	RESET Ⓛ	VDD(+5V)	I	58
8	I	OSC 1	———	—	57
9	I	OSC 2	LOAD SPEED UP Ⓛ	O	56
10	O	TIMER CLOCK	VIDEO DELAY REC Ⓛ	O	55
11	O	CYL ON Ⓗ	AUDIO DELAY REC Ⓛ	O	54
12	O	HIGH SPEED SHUTTER 2	FLYING ERASE Ⓛ	O	53
13	O	HIGH SPEED SHUTTER 1	SCAN 4	O	52
14	O	REC PAUSE Ⓛ	SCAN 5	O	51
15	—	———	SCAN 6	O	50
16	O	POWER ON Ⓗ	SCAN 7	O	49
17	O	CAMERA ON Ⓛ	SCAN 0	O	48
18	O	UNLOAD Ⓗ	SCAN 1	O	47
19	O	LOAD Ⓗ	SCAN 2	O	46
20	O	CONTROL DUTY Ⓛ	SCAN 3	O	45
21	O	DELAY REC Ⓗ	POWER SW ON Ⓛ	I	44
22	O	V-SYNC	SERIAL CLOCK	O	43
23	O	CHARACTER GEN.STOROBO	CHARACTER DATA	O	42
24	O	SENSOR LED PULSE	TIMER DATA	I	41
25	O	CASSETTE LED PULSE	KEY DATA 0	I	40
26	—	VSS(GND)	KEY DATA 1	I	39
27	I	TAKEUP REEL PULSE	KEY DATA 2	I	38
28	I	VERTICAL DRIVE	KEY DATA 3	I	37
29	I	HEAD AMP SW	UNDER CUT Ⓛ	I	36
30	I	P.B CTL PULSE	EJECT Ⓛ	I	35
31	I	SUPPLY PHOTO TR Ⓗ	WHITE BALANCE	O	34
32	I	DEW SENSOR Ⓗ	SUPPLY REEL PULSE	I	33

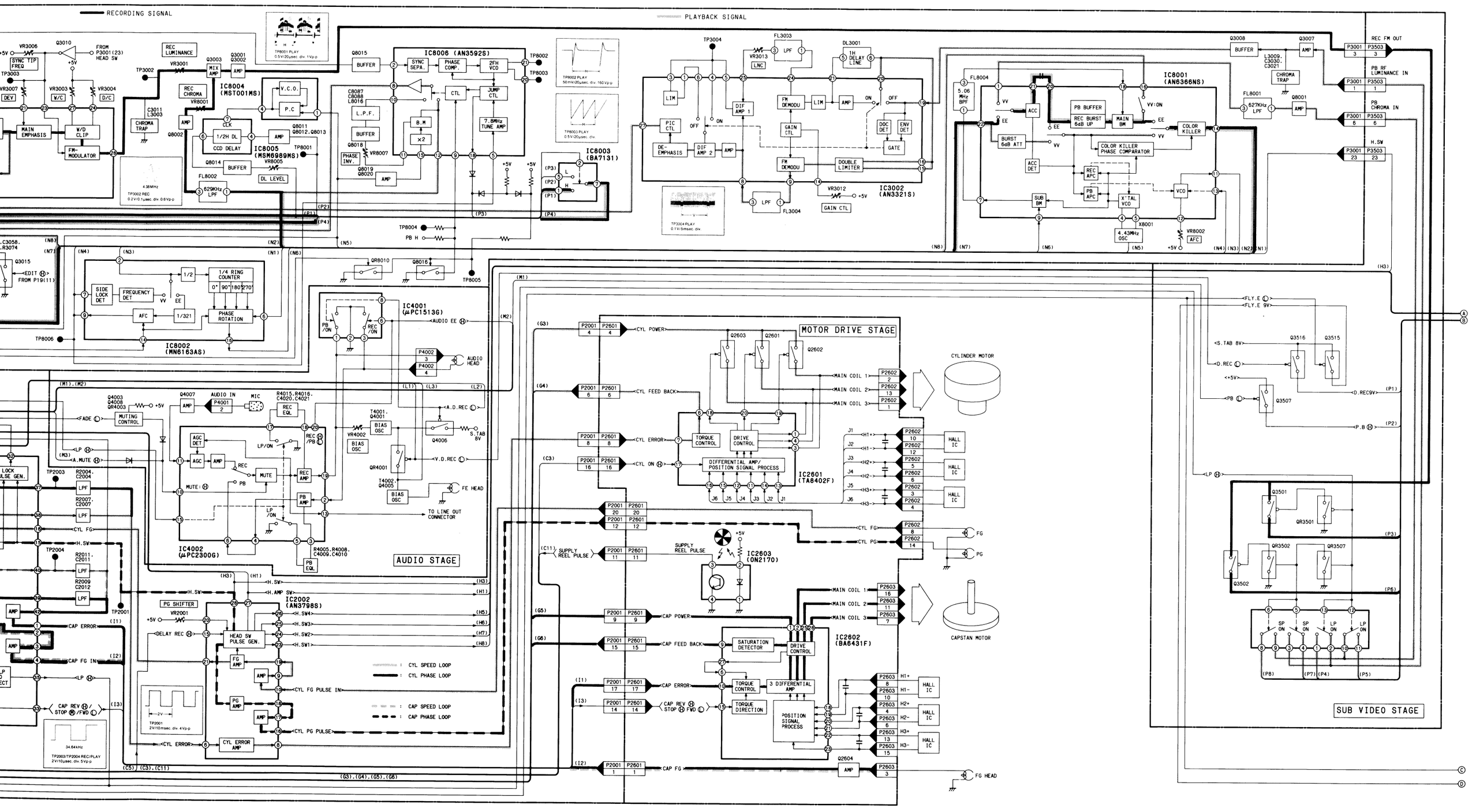
RECORDING SIGNAL
PLAYBACK SIGNAL
IC8006 (AN3592S)
IC8005 (MSM6989MS)
IC8004 (MST001MS)
IC8002 (MN6163AS)
IC4001 (μPC1513G)
IC4002 (μPC2300G)
IC8003 (BA7131)
IC3002 (AN3321S)
IC8001 (AN6366NS)
IC2002 (AN3798S)
IC2601 (TA8402F)
IC2603 (ON2170)
IC2602 (BA6431F)
MOTOR DRIVE STAGE
AUDIO STAGE
SUB VIDEO STAGE
CYLINDER MOTOR
CAPSTAN MOTOR
CYL SPEED LOOP
CYL PHASE LOOP
CAP SPEED LOOP
CAP PHASE LOOP

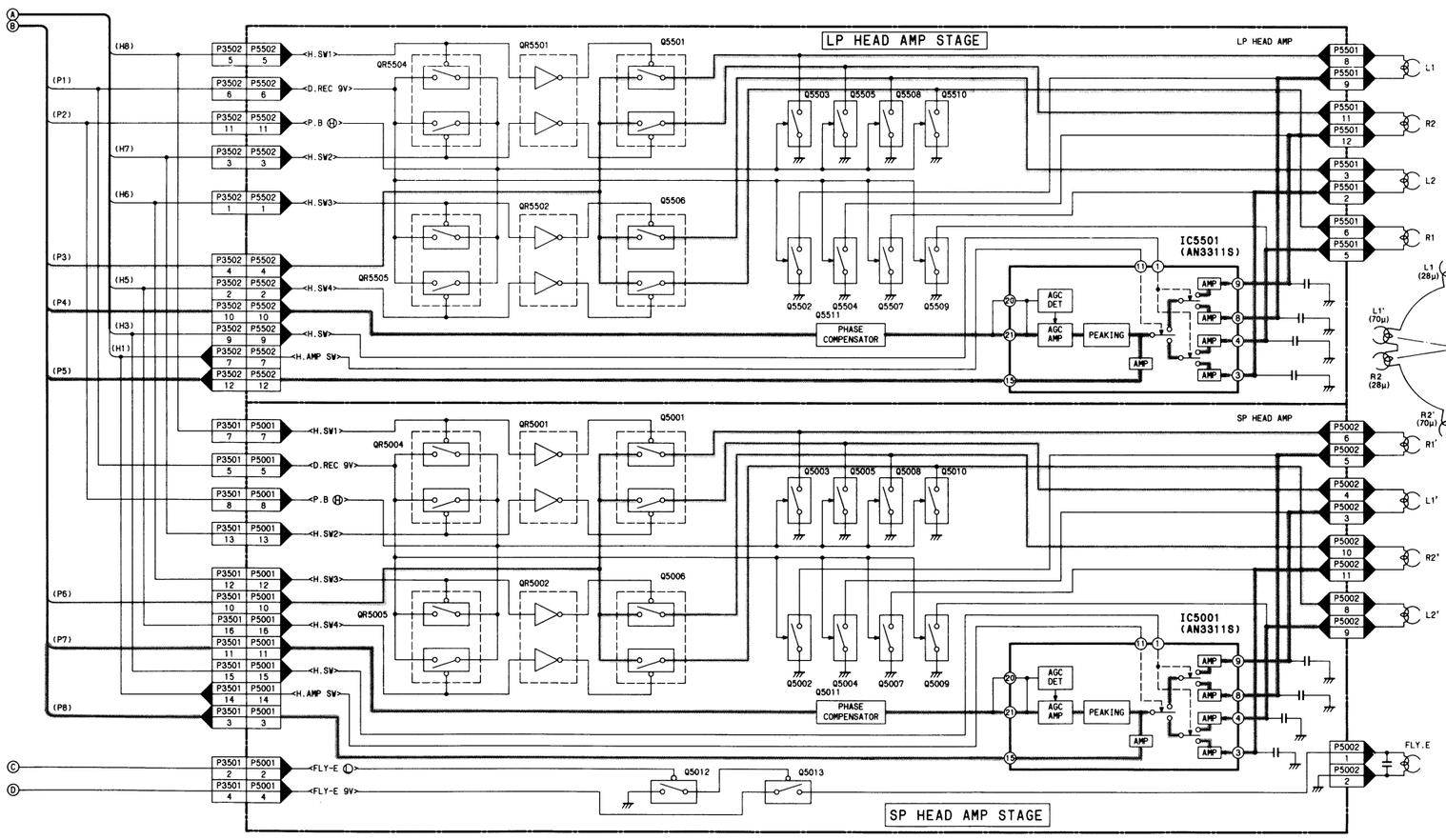

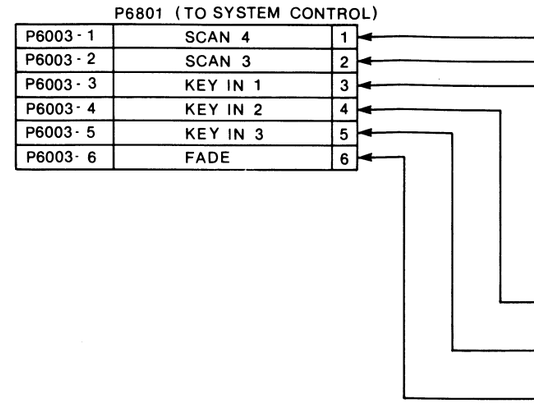

NOTE: DO NOT USE THE PART NUMBER SHOWN ON THIS D
IN THE PARTS LIST, AND MAY BE SLIGHTLY DIFFE

P6801

1	SCAN
2	SCAN
3	KEY I
4	KEY I
5	KEY I
6	FADE

ERA OPERATION SCHEMATIC DIAGRAM

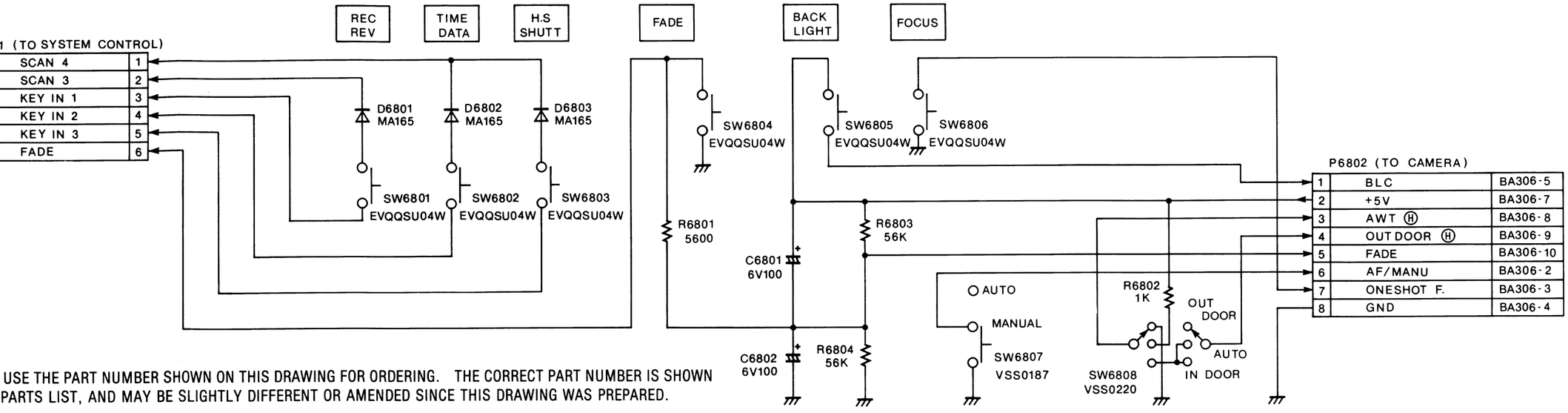

USE THE PART NUMBER SHOWN ON THIS DRAWING FOR ORDERING. THE CORRECT PART NUMBER IS SHOWN
PARTS LIST, AND MAY BE SLIGHTLY DIFFERENT OR AMENDED SINCE THIS DRAWING WAS PREPARED.

3-5. CAMERA OPERATION C.B.A. (VEP06445A)

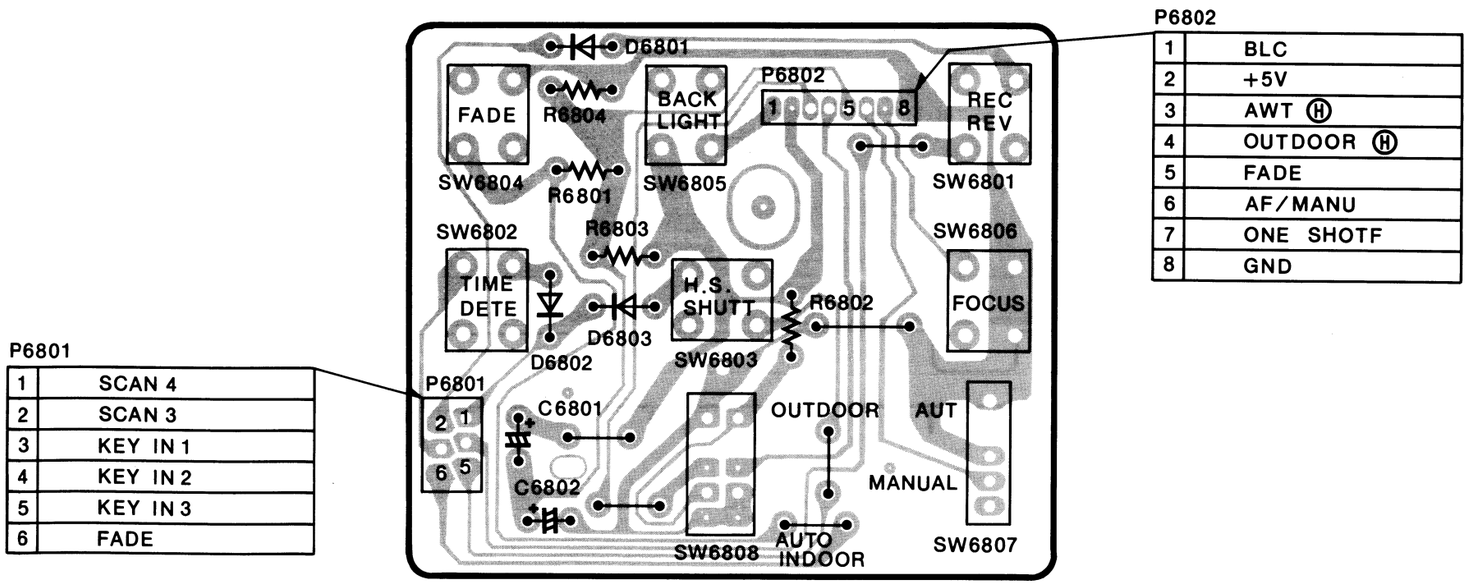

3-6. PROCESS C.B.A. (VEP23064B) & ENCODER PACK C.B.A. (VEP23061B)

PROCESS & ENCODER PACK C.B.A.

Transistor		
Q301	B-3	Ⓒ
Q302	B-2	Ⓒ
Q303	B-1	Ⓒ
Q304	A-9	Ⓕ
Q305	A-11	Ⓕ
Q306	A-11	Ⓕ
Q307	B-9	Ⓕ
Q308	B-8	Ⓕ
Q311	C-9	Ⓕ
Q314	B-10	Ⓕ
Q315	A-10	Ⓕ
Q316	A-5	Ⓒ
Q318	C-12	Ⓕ
Q319	C-12	Ⓕ
Q320	C-12	Ⓕ
Q321	C-12	Ⓕ
Q322	C-12	Ⓕ
Q323	C-2	Ⓒ
Q324	A-11	Ⓕ
Q325	B-11	Ⓕ
Q327	B-10	Ⓕ
Q328	A-10	Ⓕ
Q330	B-2	Ⓒ
Q331	D-8	Ⓕ
Q332	B-8	Ⓕ
Q339	B-12	Ⓕ
Q340	B-12	Ⓕ
Q344	D-6	Ⓒ
Q345	D-6	Ⓒ
Q346	D-6	Ⓒ
Q347	D-6	Ⓒ
Q348	D-8	Ⓕ
Q350	D-2	Ⓒ
Q351	C-12	Ⓕ
Q353	C-8	Ⓕ
Q901	D-2	Ⓕ
Q902	E-2	Ⓕ

Transistor & Resistor		
QR302	A-3	Ⓒ

Integrated Circuit		
IC101	A-2	Ⓒ
IC102	B-13	Ⓕ
IC103	A-2	Ⓒ
IC104	A-4	Ⓒ
IC105	D-7	Ⓒ
IC301	B-3	Ⓒ
IC302	A-6	Ⓒ
IC303	C-5	Ⓒ
IC304	B-6	Ⓒ
IC305	A-11	Ⓕ
IC306	C-11	Ⓕ
IC307	C-4	Ⓒ
IC308	B-4	Ⓒ
IC309	C-4	Ⓒ
IC310	B-4	Ⓒ
IC901	E-1	Ⓒ

Test Point		
TP1	A-6	Ⓒ
TP1	A-8	Ⓕ
TP2	C-5	Ⓒ
TP2	C-10	Ⓕ
TP3	A-1	Ⓒ
TP3	A-13	Ⓕ
TP4	C-3	Ⓒ
TP4	C-11	Ⓕ
TP5	C-3	Ⓒ
TP5	C-11	Ⓕ
TP6	C-3	Ⓒ
TP6	C-11	Ⓕ
TP7	C-5	Ⓒ
TP7	C-9	Ⓕ
TP8	B-3	Ⓒ
TP8	B-11	Ⓕ
TP9	A-5	Ⓒ
TP9	A-9	Ⓕ
TP10	C-2	Ⓒ
TP10	C-12	Ⓕ
TP11	C-2	Ⓒ
TP11	C-12	Ⓕ
TP12	B-1	Ⓒ
TP12	B-13	Ⓕ

Adjustment		
VR101	A-12	Ⓕ
VR102	A-12	Ⓕ
VR103	B-13	Ⓕ
VR104	B-13	Ⓕ
VR105	A-12	Ⓕ
VR106	A-12	Ⓕ
VR107	B-12	Ⓕ
VR301	B-12	Ⓕ
VR302	C-9	Ⓕ
VR303	B-10	Ⓕ
VR304	B-9	Ⓕ
VR305	B-8	Ⓕ
VR306	C-9	Ⓕ
VR308	A-9	Ⓕ
VR312	B-11	Ⓕ
VR313	B-11	Ⓕ
VR314	C-11	Ⓕ
VR315	C-12	Ⓕ
VR316	B-9	Ⓕ
VR317	A-10	Ⓕ
VR318	A-10	Ⓕ
VR319	A-9	Ⓕ
VR322	C-8	Ⓕ
VR323	C-9	Ⓕ
VR324	B-9	Ⓕ
VR325	D-8	Ⓕ

Connector		
B301	A-5	Ⓒ
B301	A-9	Ⓕ
B302	D-5	Ⓒ
B302	D-9	Ⓕ
BA301	B-3	Ⓒ
BA301	C-11	Ⓕ
BA304	C-2	Ⓒ
BA304	C-12	Ⓕ
BA305	C-2	Ⓒ
BA305	C-12	Ⓕ
BA306	D-6	Ⓒ
BA306	C-8	Ⓕ
BA307	D-7	Ⓒ
BA307	D-7	Ⓕ

ADDRESS INFORMATION
Ⓒ ··· COMPONENT SIDE
Ⓕ ··· FOIL SIDE

ENCODER PACK C.B.A. (VEP23061B)

PROCESS C.B.A. (VEP23064B)

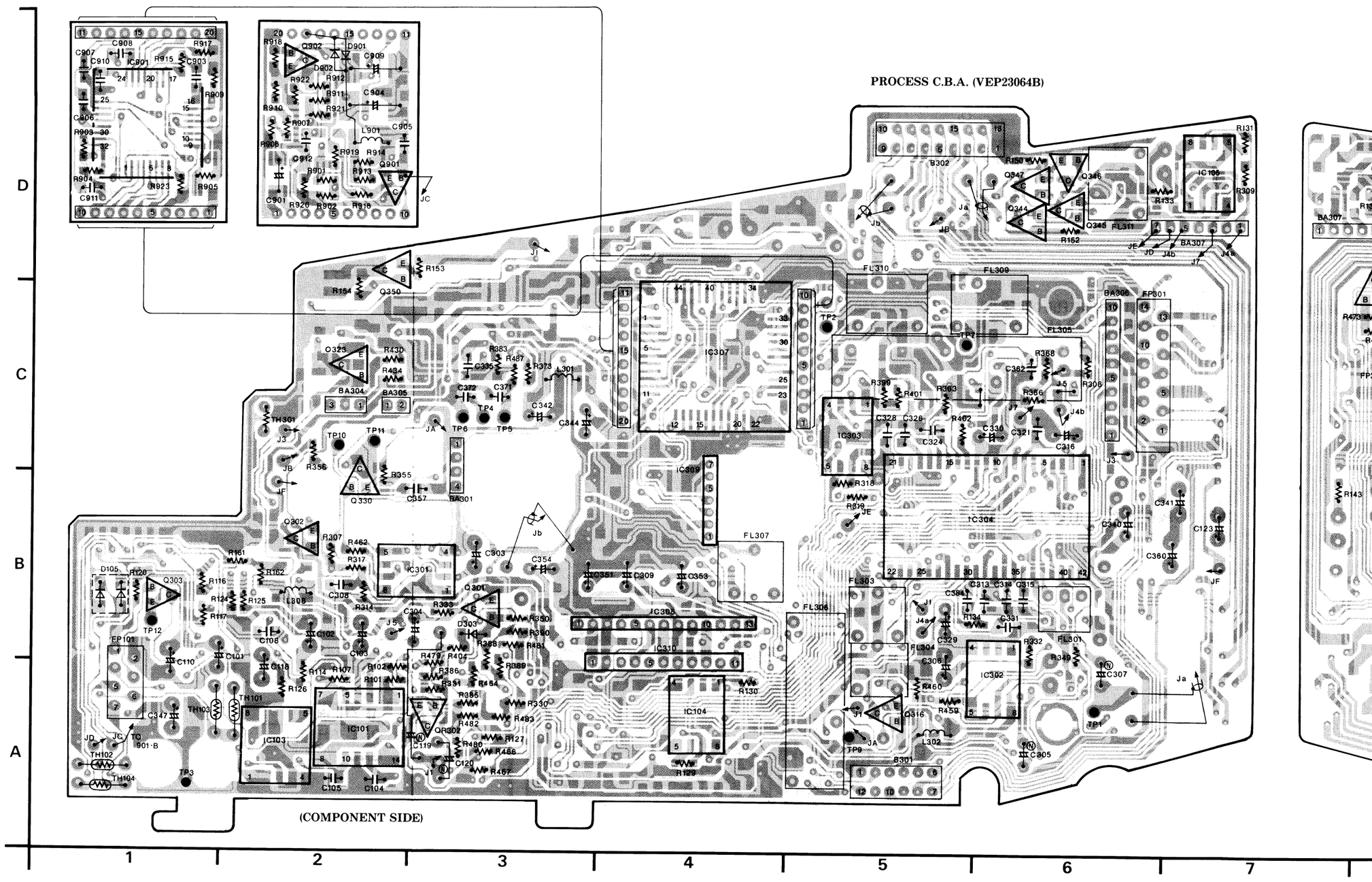

Back Page:
CAMERA OPERATION Section

PROCESS C.B.A. (VEP23064B)

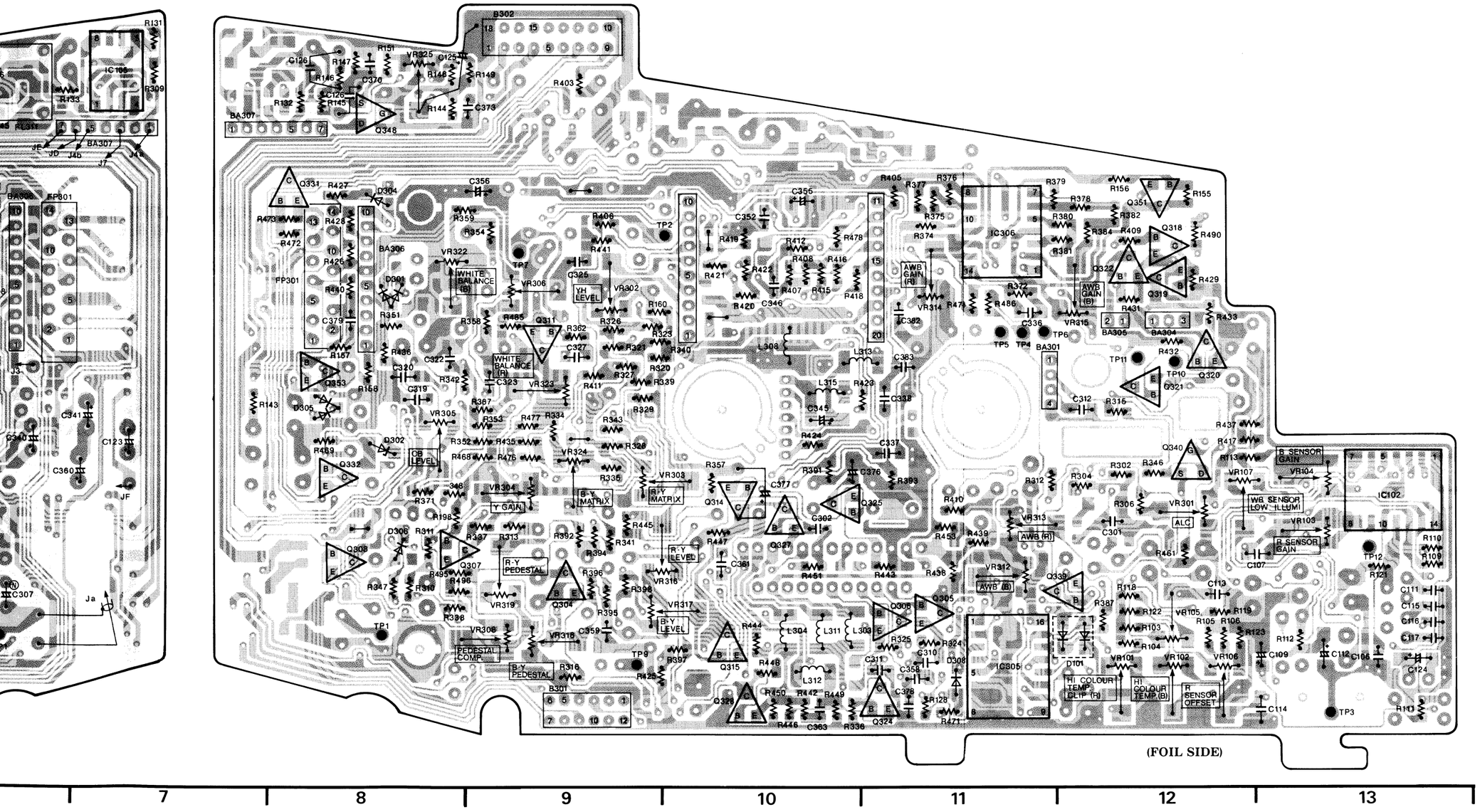

PROCESS MAIN CIRCUIT TP (Test Point) WAVE FORM (REF No. 300 Series)

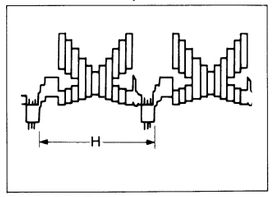

TP301 STOP
0.1 V/20µsec. div. 0.35 Vp-p

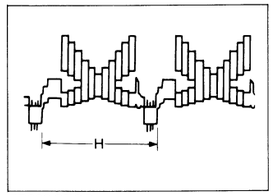

TP302 STOP
0.1 V/20µsec. div. 0.3 Vp-p

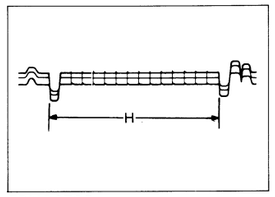

TP307 STOP
50 mV/20µsec. div. 50 mVp-p

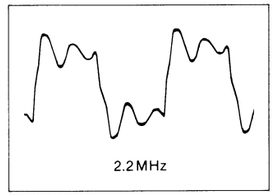

TP308 STOP
0.2 V/50µsec. div. 8 Vp-p

3-7. PROCESS & ENCODER PACK SCHEMATIC DIAGRAM

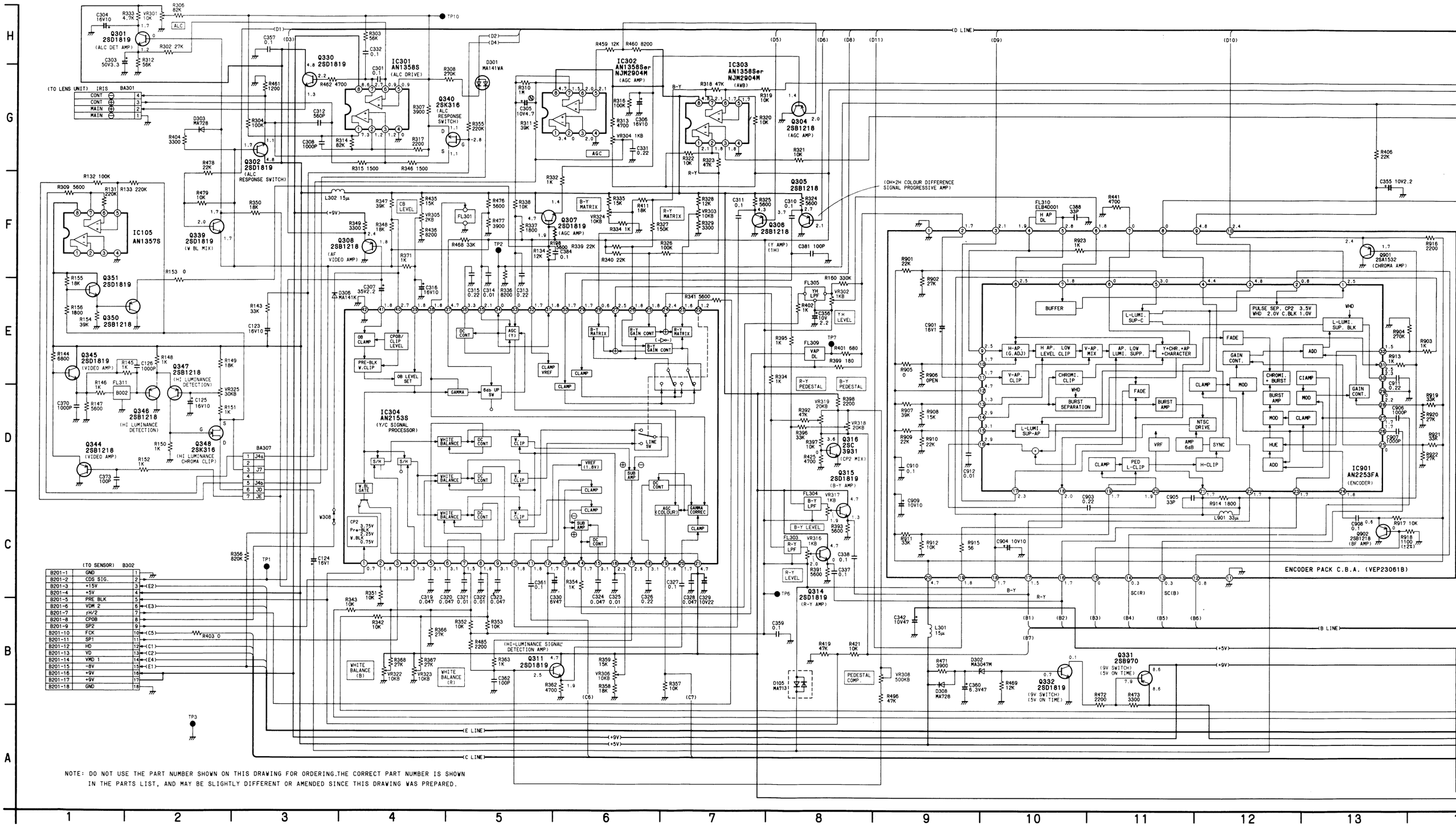

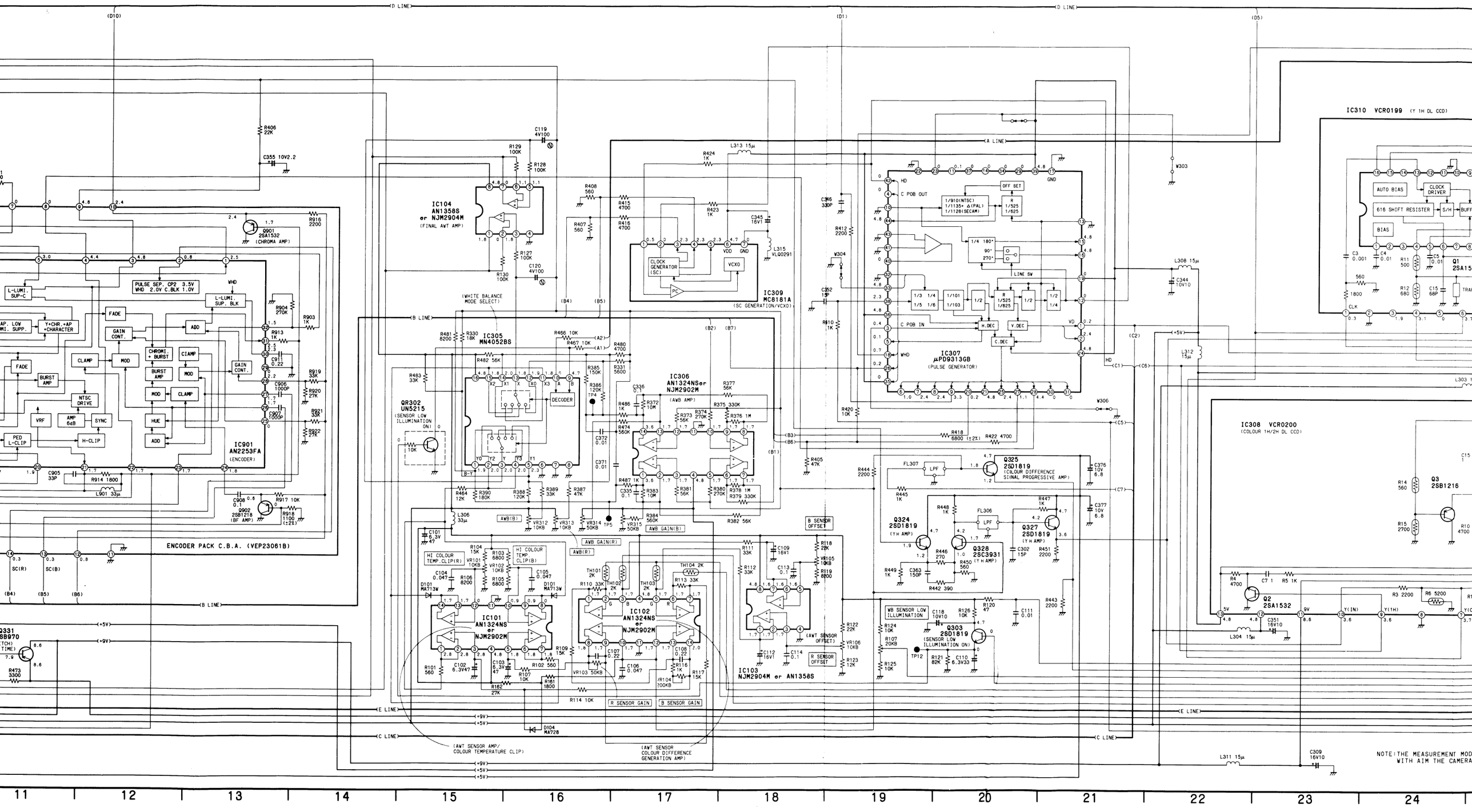
IC901
AN2253FA
(ENCODER)
ENCODER PACK C.B.A. (VEP23061B)
IC104
AN1358S
or NJM2904M
(FINAL AWT AMP)
IC309
MC8181A
(SC GENERATION/VCXO)
IC305
MN4052BS
IC306
AN1324NSer
NJM2902M
(AWB AMP)
IC307
μPD9313GB
(PULSE GENERATOR)
IC310 VCR0199 (Y 1H DL CCD)
IC308 VCR0200
(COLOUR 1H/2H DL CCD)
IC101
AN1324NS
or
NJM2902M
IC102
AN1324NS
or
NJM2902M
IC103
NJM2904M or AN1358S
QR302
UN5215
(SENSOR LOW ILLUMINATION ON)
Q901
2SA1532
(CHROMA AMP)
Q902
2SB1218
(BF AMP)
Q325
2SD1819
(COLOUR DIFFERENCE SIGNAL PROGRESSIVE AMP)
Q324
2SD1819
(Y H AMP)
Q328
2SC3931
(Y H AMP)
Q327
2SD1819
(Y H AMP)
Q303
2SD1819
(SENSOR LOW ILLUMINATION ON)
Q2
2SA1532
Q3
2SB1216
Q1
2SA15
Q331
2SB970
(AWT SENSOR AMP/
COLOUR TEMPERATURE CLIP)
(AWT SENSOR
COLOUR DIFFERENCE
GENERATION AMP)
NOTE: THE MEASUREMENT MOD
WITH AIM THE CAMERA

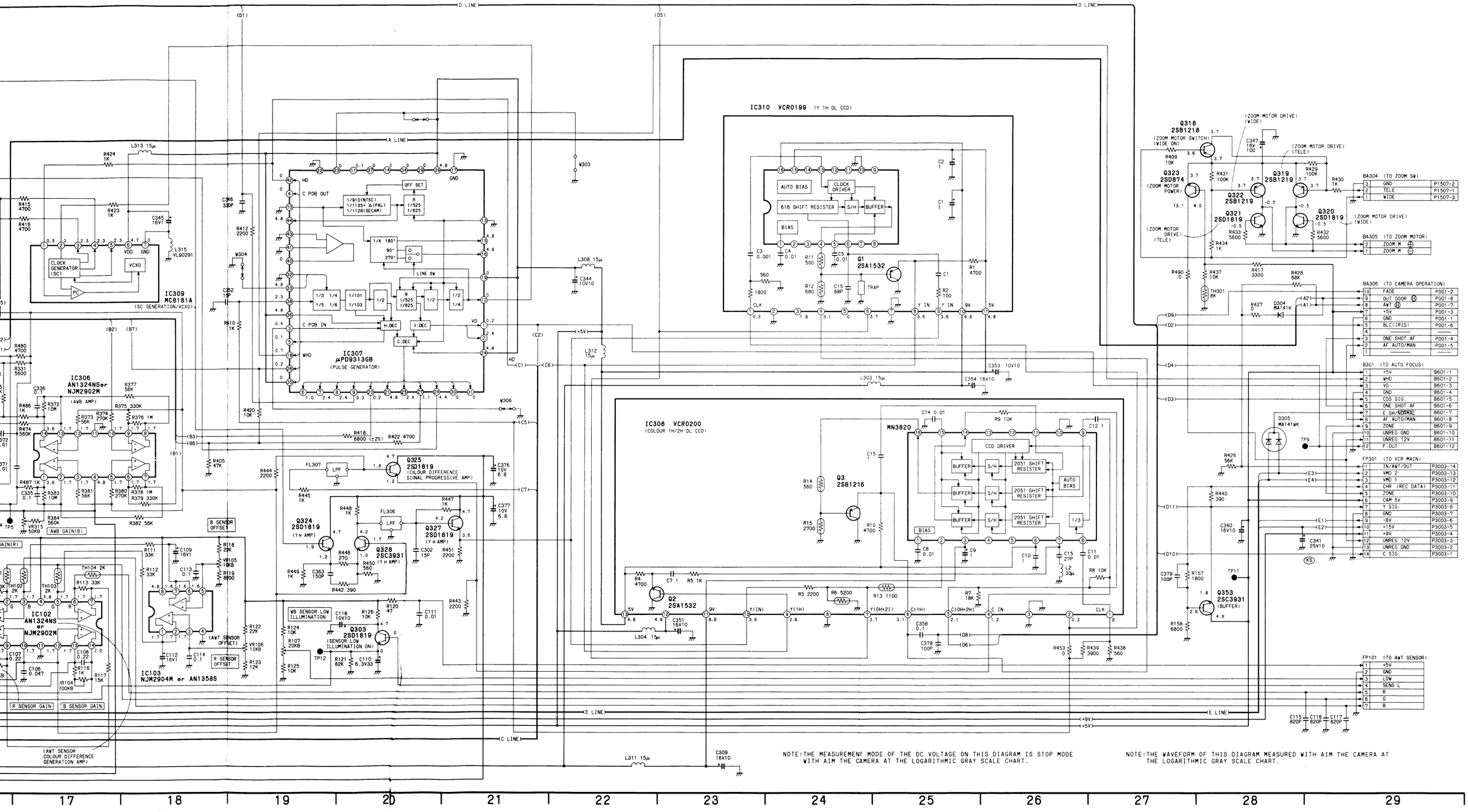

NOTE: THE MEASUREMENT MODE OF THE DC VOLTAGE ON THIS DIAGRAM IS STOP MODE WITH AIM THE CAMERA AT THE LOGARITHMIC GRAY SCALE CHART.

NOTE: THE WAVEFORM OF THIS DIAGRAM MEASURED WITH AIM THE CAMERA AT THE LOGARITHMIC GRAY SCALE CHART.

Next Page:
AUTO FOCUS Section

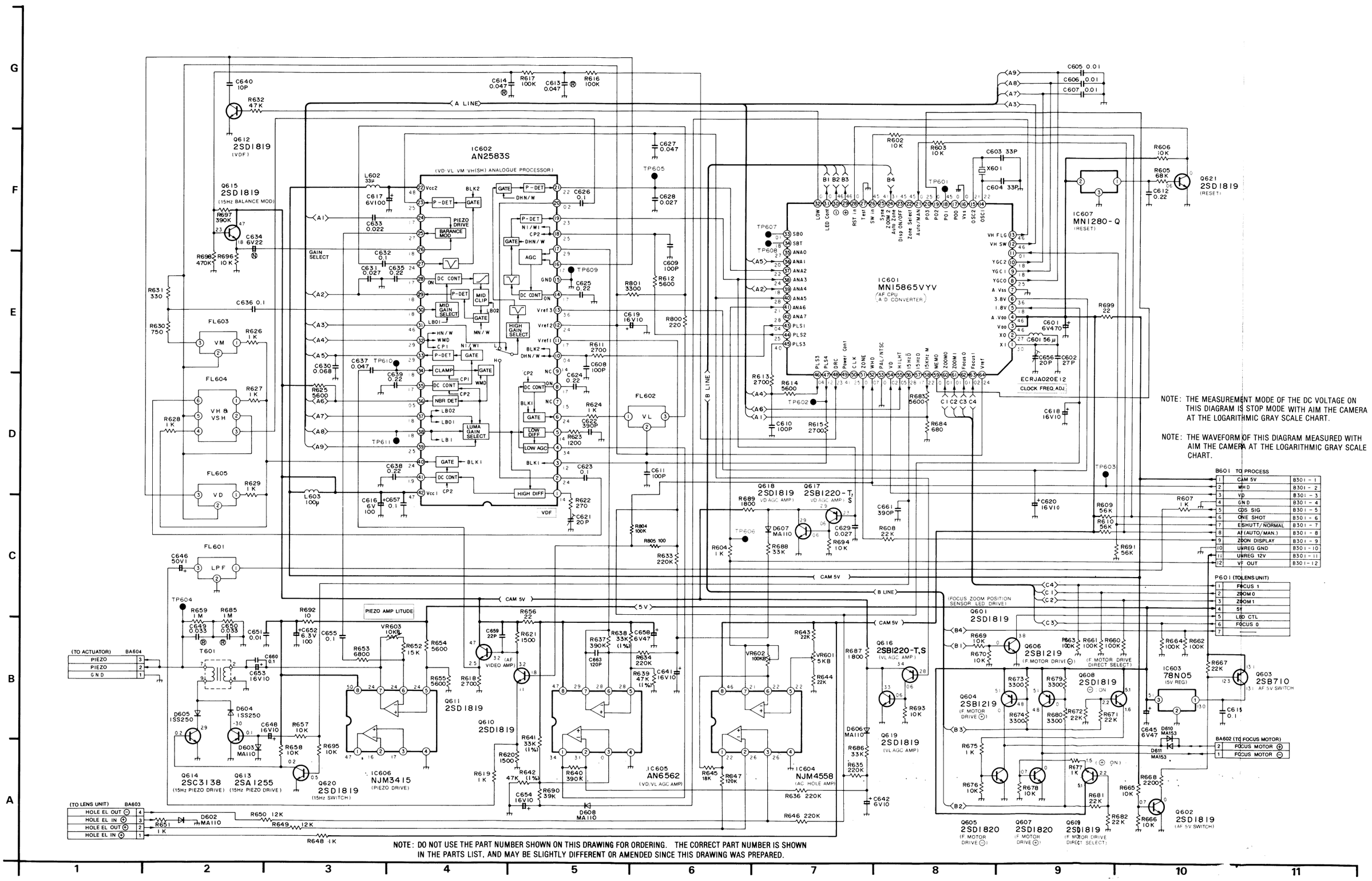

NOTE: THE MEASUREMENT MODE OF THE DC VOLTAGE ON THIS DIAGRAM IS STOP MODE WITH AIM THE CAMERA AT THE LOGARITHMIC GRAY SCALE CHART.

NOTE: THE WAVEFORM OF THIS DIAGRAM MEASURED WITH AIM THE CAMERA AT THE LOGARITHMIC GRAY SCALE CHART.

NOTE: DO NOT USE THE PART NUMBER SHOWN ON THIS DRAWING FOR ORDERING. THE CORRECT PART NUMBER IS SHOWN IN THE PARTS LIST, AND MAY BE SLIGHTLY DIFFERENT OR AMENDED SINCE THIS DRAWING WAS PREPARED.

AUTO F
WAVE F

TP602 STO
2V/20μsec

3-9. AUTO FOCUS C.B.A. (VEP28015B)

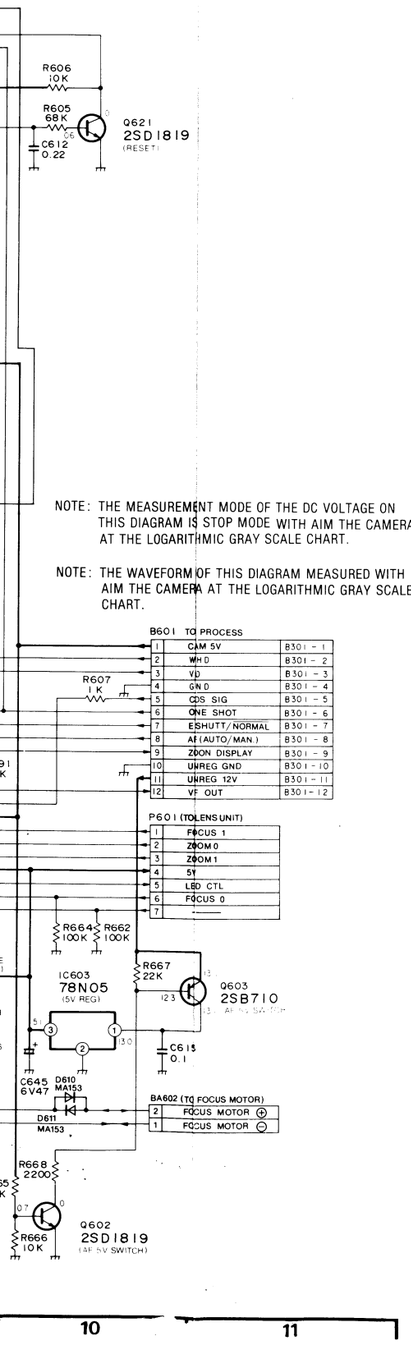

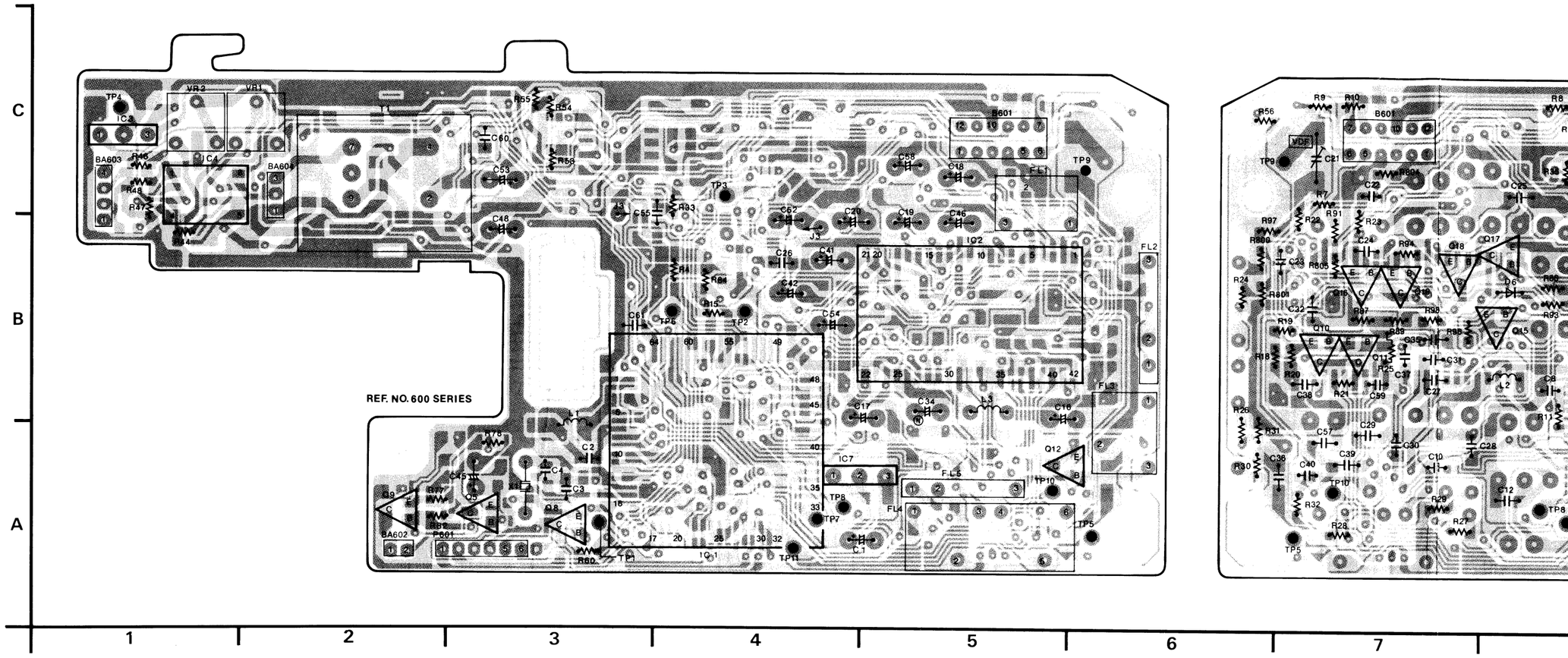

AUTO FOCUS CIRCUIT TP (Test Point) WAVE FORM(REF No. 600 Series)

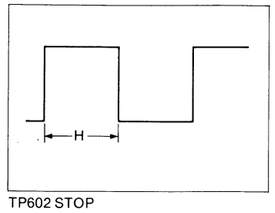

TP602 STOP
2V/20μsec. div. 5Vp-p

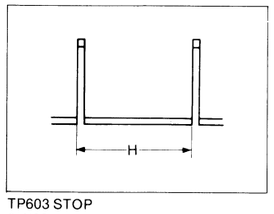

TP603 STOP
2V/20μsec. div. 5Vp-p

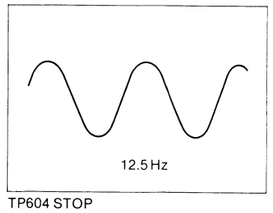

TP604 STOP
5V/20μsec. div. 70Vp-p

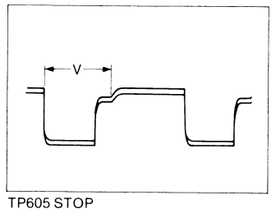

TP605 STOP
0.5V/5msec. div. 4Vp-p

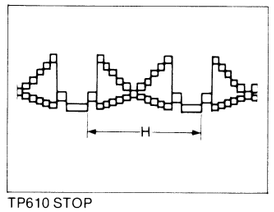

TP610 STOP
0.1V/20μsec. div. 0.2Vp-p

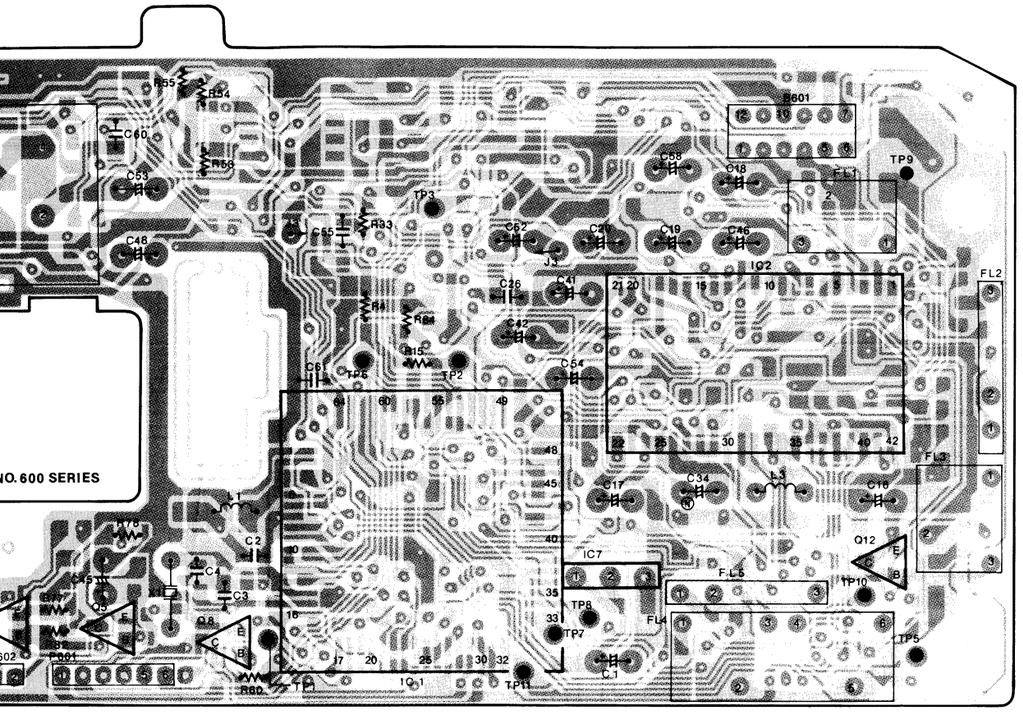

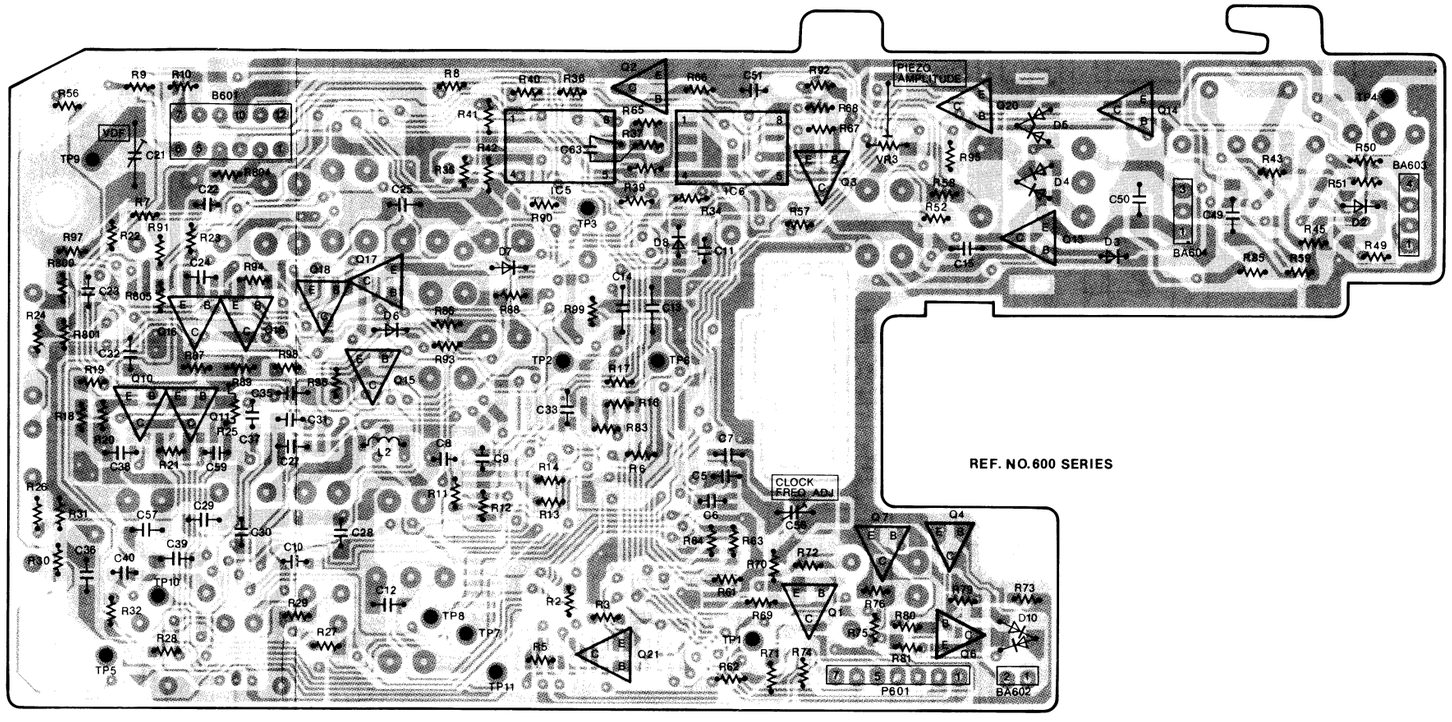

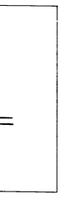

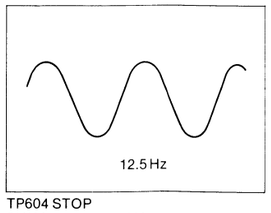

TP604 STOP
5 V/20μsec. div. 70 Vp-p

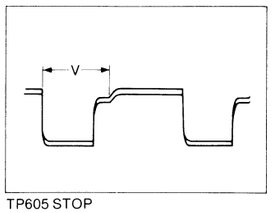

TP605 STOP
0.5 V/5 msec. div. 4 Vp-p

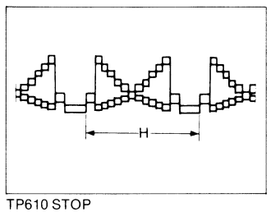

TP610 STOP
0.1 V/20μsec. div. 0.2 Vp-p

AUTO FOCUS C.B.A.

Transistor		Integrated Circuit			
Q601	A-9 Ⓕ	IC601	A-4 Ⓒ	TP608	A-4 Ⓒ
Q602	C-9 Ⓕ	IC602	B-5 Ⓒ	TP608	A-8 Ⓕ
Q603	C-9 Ⓕ	IC603	C-1 Ⓒ	TP609	C-6 Ⓒ
Q604	A-10 Ⓕ	IC604	C-1 Ⓒ	TP609	C-7 Ⓕ
Q605	A-3 Ⓒ	IC605	C-8 Ⓕ	TP610	A-5 Ⓒ
Q606	A-10 Ⓕ	IC606	C-9 Ⓕ	TP610	A-7 Ⓕ
Q607	B-9 Ⓕ	IC607	A-4 Ⓒ	TP611	A-4 Ⓒ
Q608	A-3 Ⓒ	**Test Point**		TP611	A-8 Ⓕ
Q609	A-2 Ⓒ	TP601	A-3 Ⓒ	**Adjustment**	
Q610	B-7 Ⓕ	TP601	A-9 Ⓕ	VR601	C-2 Ⓒ
Q611	B-7 Ⓕ	TP602	B-4 Ⓒ	VR602	C-1 Ⓒ
Q612	A-5 Ⓒ	TP602	B-8 Ⓕ	VR603	C-9 Ⓕ
Q613	C-10 Ⓕ	TP603	C-4 Ⓒ	C621	C-7 Ⓕ
Q614	C-10 Ⓕ	TP603	C-8 Ⓕ	C656	B-9 Ⓕ
Q615	B-8 Ⓕ	TP604	C-1 Ⓒ	**Connector**	
Q616	B-7 Ⓕ	TP604	C-12 Ⓕ	P601	A-10 Ⓕ
Q617	B-8 Ⓕ	TP605	A-6 Ⓒ	P601	A-2 Ⓒ
Q618	B-7 Ⓕ	TP605	A-7 Ⓕ	B601	C-5 Ⓒ
Q619	B-8 Ⓕ	TP606	B-4 Ⓒ	B601	C-7 Ⓕ
Q620	C-10 Ⓕ	TP606	B-9 Ⓕ	BA602	A-2 Ⓒ
Q621	A-9 Ⓕ	TP607	A-4 Ⓒ	BA603	C-11 Ⓕ
		TP607	A-8 Ⓕ	BA603	C-1 Ⓒ
				BA604	C-2 Ⓒ
				BA604	B-11 Ⓕ

ADDRESS INFORMATION
Ⓒ ··· COMPONENT SIDE
Ⓕ ··· FOIL SIDE

3-10. SENSOR & C.D.S. PACK SCHEMATIC DIAGRAM

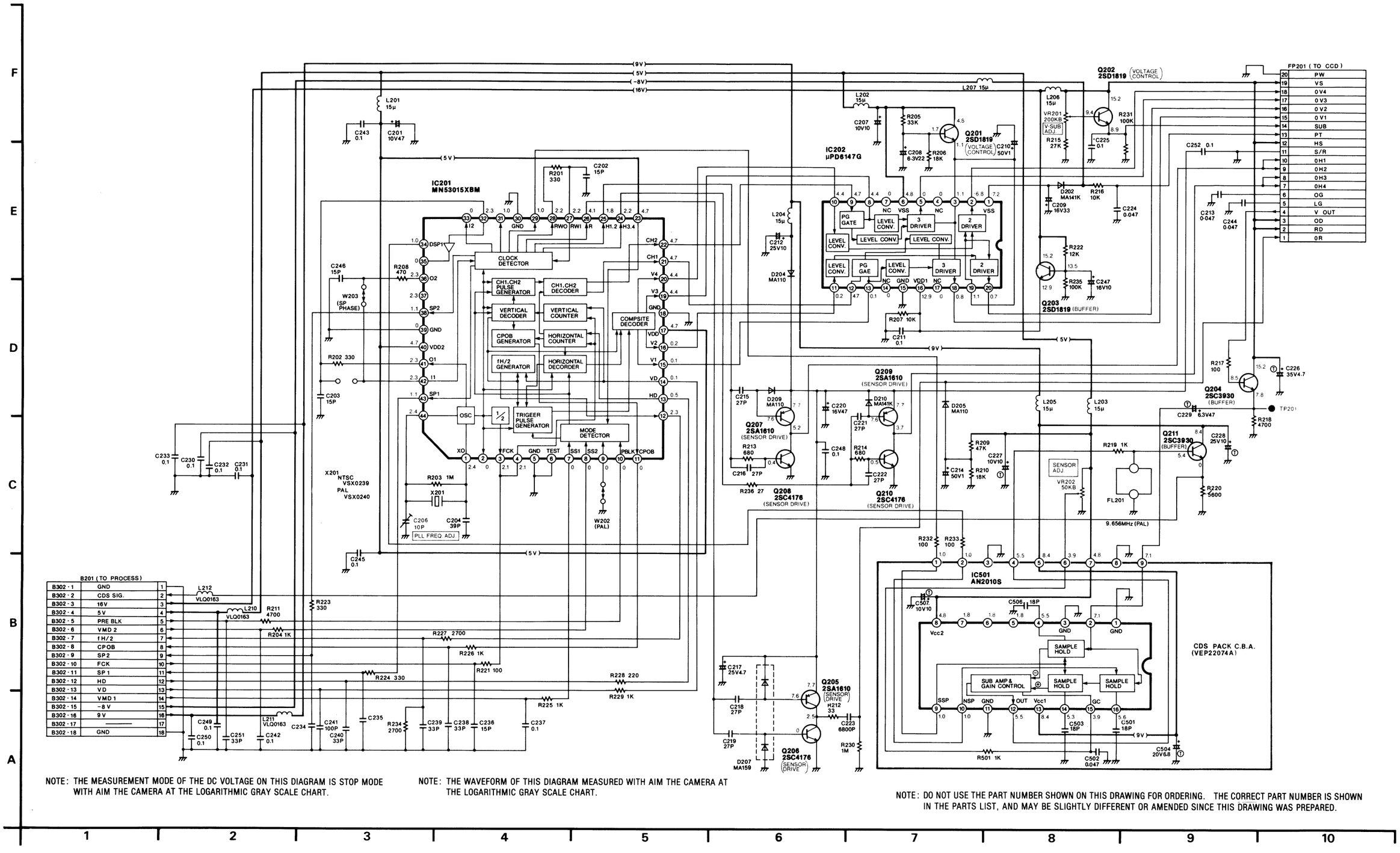

NOTE: THE MEASUREMENT MODE OF THE DC VOLTAGE ON THIS DIAGRAM IS STOP MODE WITH AIM THE CAMERA AT THE LOGARITHMIC GRAY SCALE CHART.

NOTE: THE WAVEFORM OF THIS DIAGRAM MEASURED WITH AIM THE CAMERA AT THE LOGARITHMIC GRAY SCALE CHART.

NOTE: DO NOT USE THE PART NUMBER SHOWN ON THIS DRAWING FOR ORDERING. THE CORRECT PART NUMBER IS SHOWN IN THE PARTS LIST, AND MAY BE SLIGHTLY DIFFERENT OR AMENDED SINCE THIS DRAWING WAS PREPARED.

3-11. SENSOR C.B.A. (VEP22073A) & C.D.S. PACK C.B.A. (VEP22074A)

SENSOR C.B.A. (VEP22073A)

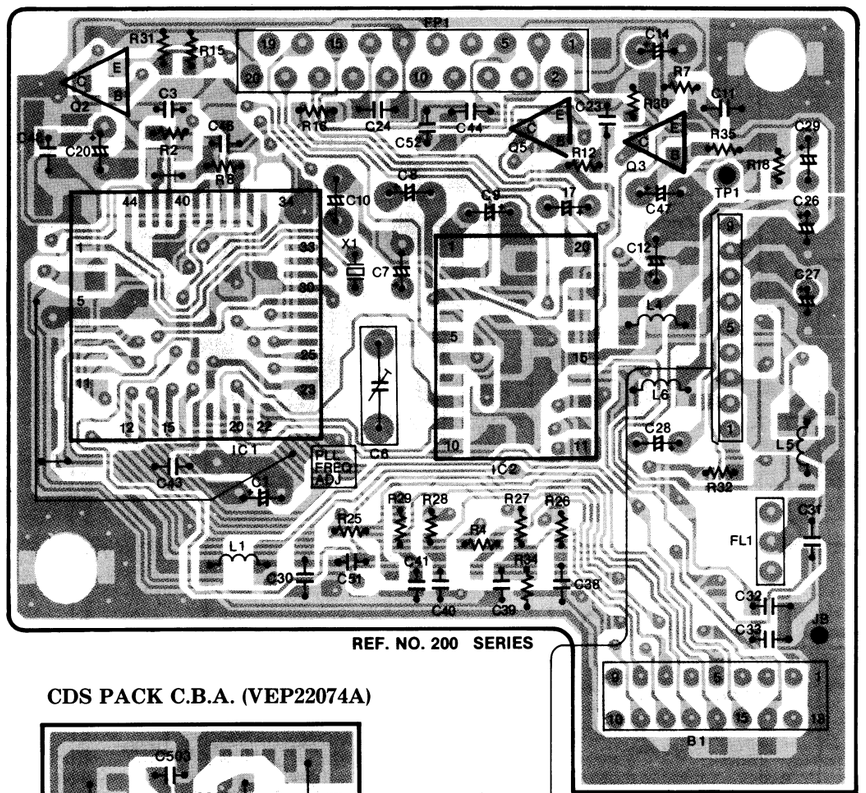

(COMPONENT SIDE)

CDS PACK C.B.A. (VEP22074A)

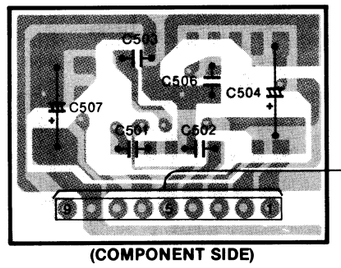

(COMPONENT SIDE)

SENSOR C.B.A. (VEP22073A)

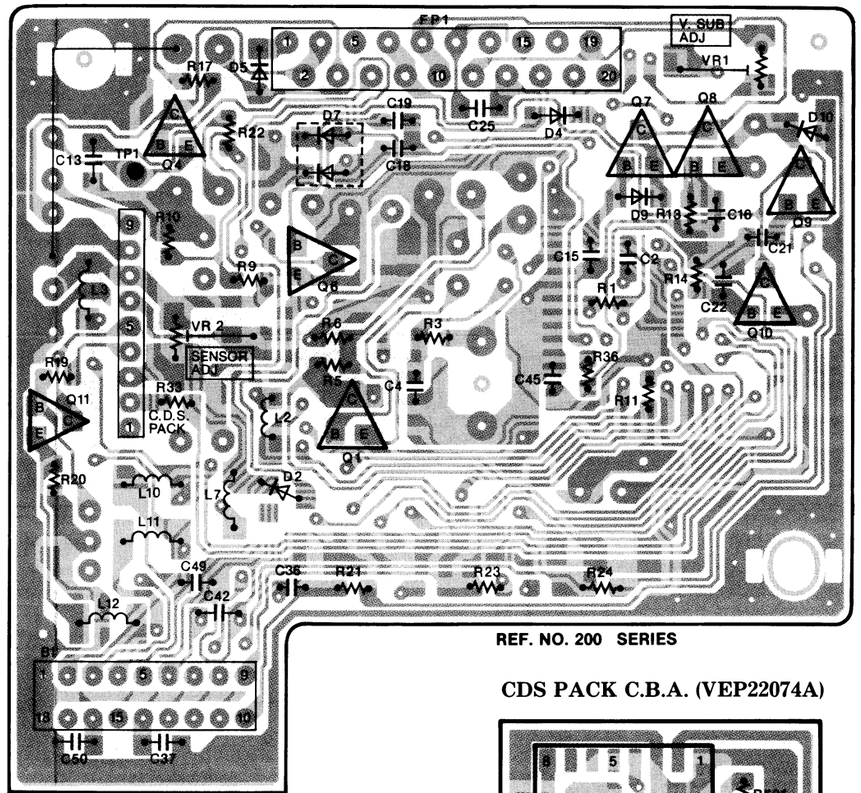

(FOIL SIDE)

CDS PACK C.B.A. (VEP22074A)

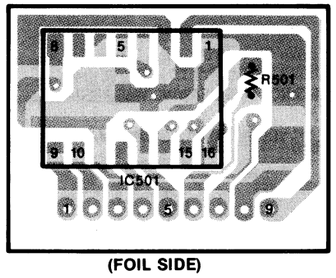

(FOIL SIDE)

SENSOR & C.D.S. PACK C.B.A.		
Transistor		
Q201	B-5	Ⓕ
Q202	C-1	Ⓒ
Q203	C-3	Ⓒ
Q204	C-4	Ⓕ
Q205	C-2	Ⓒ
Q206	C-5	Ⓕ
Q207	C-5	Ⓕ
Q208	C-6	Ⓕ
Q209	C-6	Ⓕ
Q210	C-6	Ⓕ
Q211	B-4	Ⓕ
Integrated Circuit		
IC201	B-1	Ⓒ
IC202	B-2	Ⓒ
IC203	B-3	Ⓒ
IC501	A-5	Ⓕ
Test Point		
TP201	C-3	Ⓒ
TP201	C-4	Ⓕ
Adjustment		
VR201	C-6	Ⓕ
VR202	C-4	Ⓕ
Connector		
FP201	D-2	Ⓒ
B201	A-3	Ⓒ

ADDRESS INFORMATION
Ⓒ ··· COMPONENT SIDE
Ⓕ ··· FOIL SIDE

SENSOR CIRCUIT TP (Test Point) WAVE FORM(REF No. 200 Series)

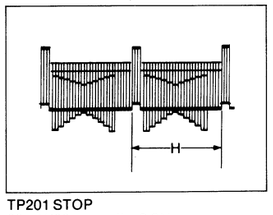

TP201 STOP
20mV/20μsec. div. 0.6Vp-p

3-12. E.V.F. SCHEMATIC DIAGRAM

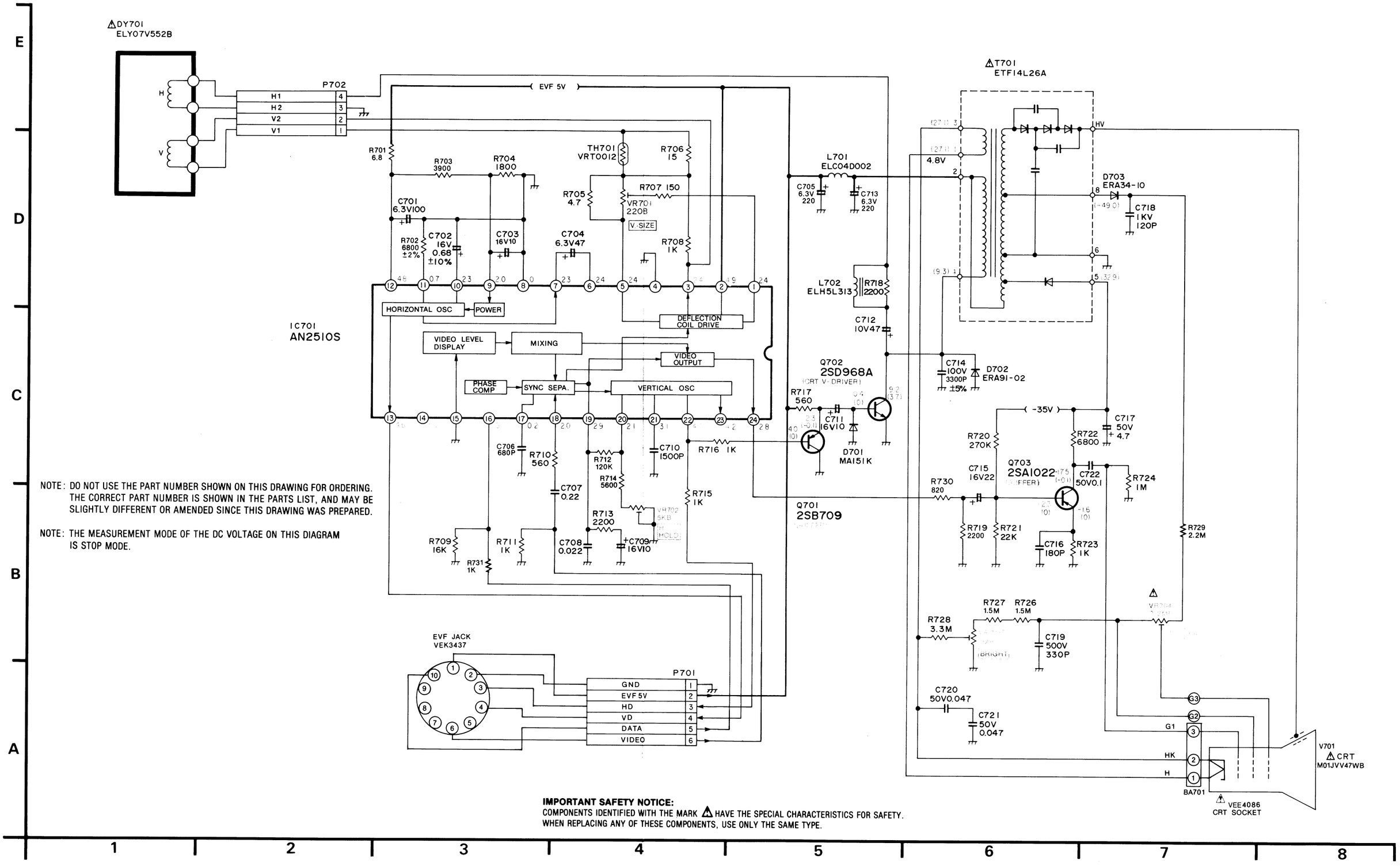

NOTE: DO NOT USE THE PART NUMBER SHOWN ON THIS DRAWING FOR ORDERING. THE CORRECT PART NUMBER IS SHOWN IN THE PARTS LIST, AND MAY BE SLIGHTLY DIFFERENT OR AMENDED SINCE THIS DRAWING WAS PREPARED.

NOTE: THE MEASUREMENT MODE OF THE DC VOLTAGE ON THIS DIAGRAM IS STOP MODE.

IMPORTANT SAFETY NOTICE:
COMPONENTS IDENTIFIED WITH THE MARK ⚠ HAVE THE SPECIAL CHARACTERISTICS FOR SAFETY. WHEN REPLACING ANY OF THESE COMPONENTS, USE ONLY THE SAME TYPE.

Back Page:
SENSOR & C.D.S. Section

3-13. E.V.F. C.B.A. (VEP27036B)

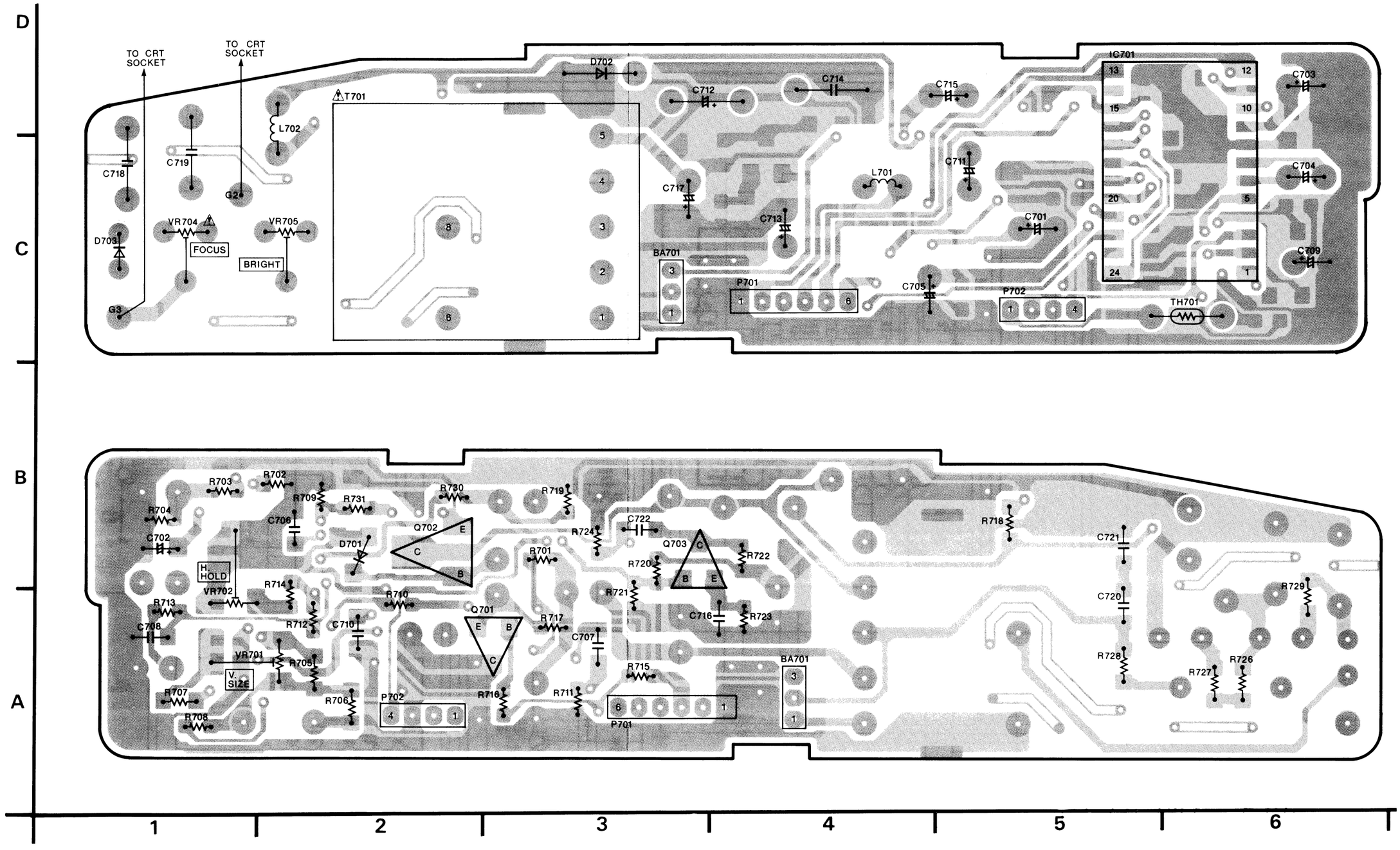

3-14. VTR OPERATION SCHEMATIC DIAGRAM

NOTE: DO NOT USE THE PART NUMBER SHOWN ON THIS DRAWING FOR ORDERING. THE CORRECT PART NUMBER IS SHOWN IN THE PARTS LIST, AND MAY BE SLIGHTLY DIFFERENT OR AMENDED SINCE THIS DRAWING WAS PREPARED.

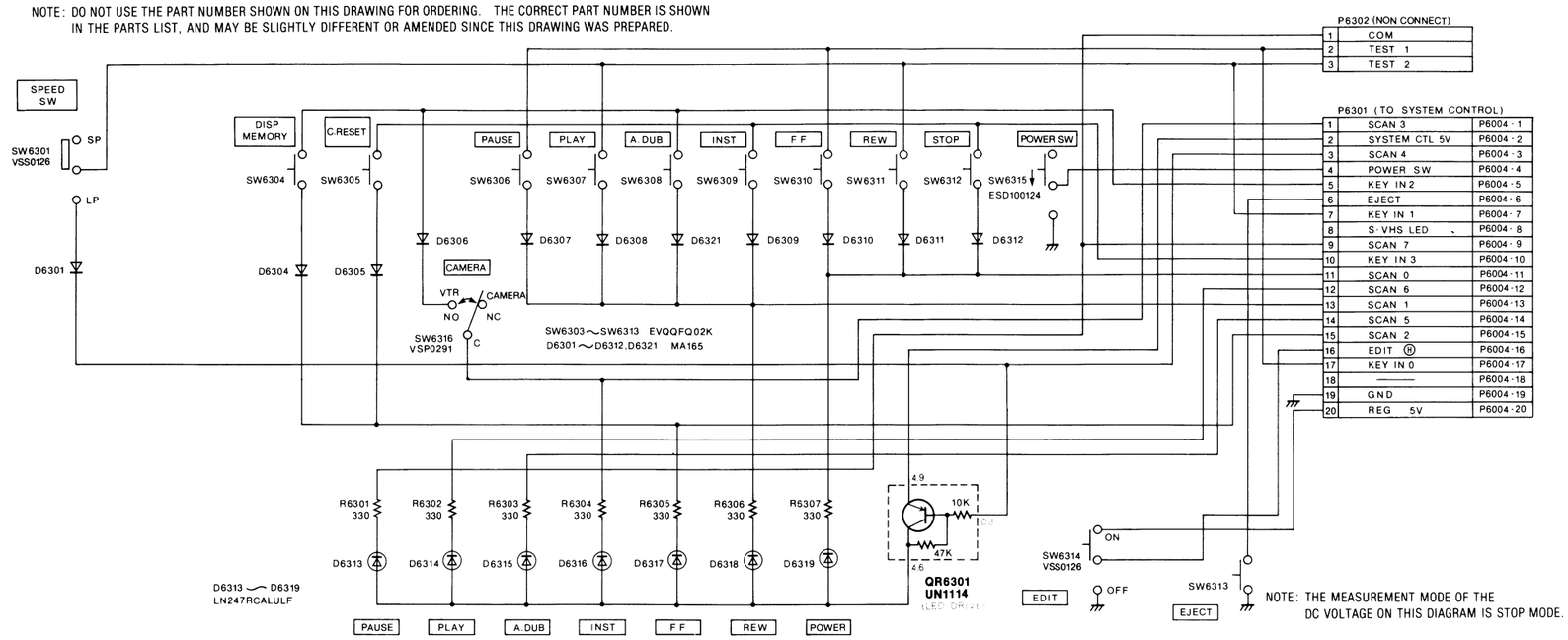

3-15. VTR OPERATION C.B.A. (VEP06444B)

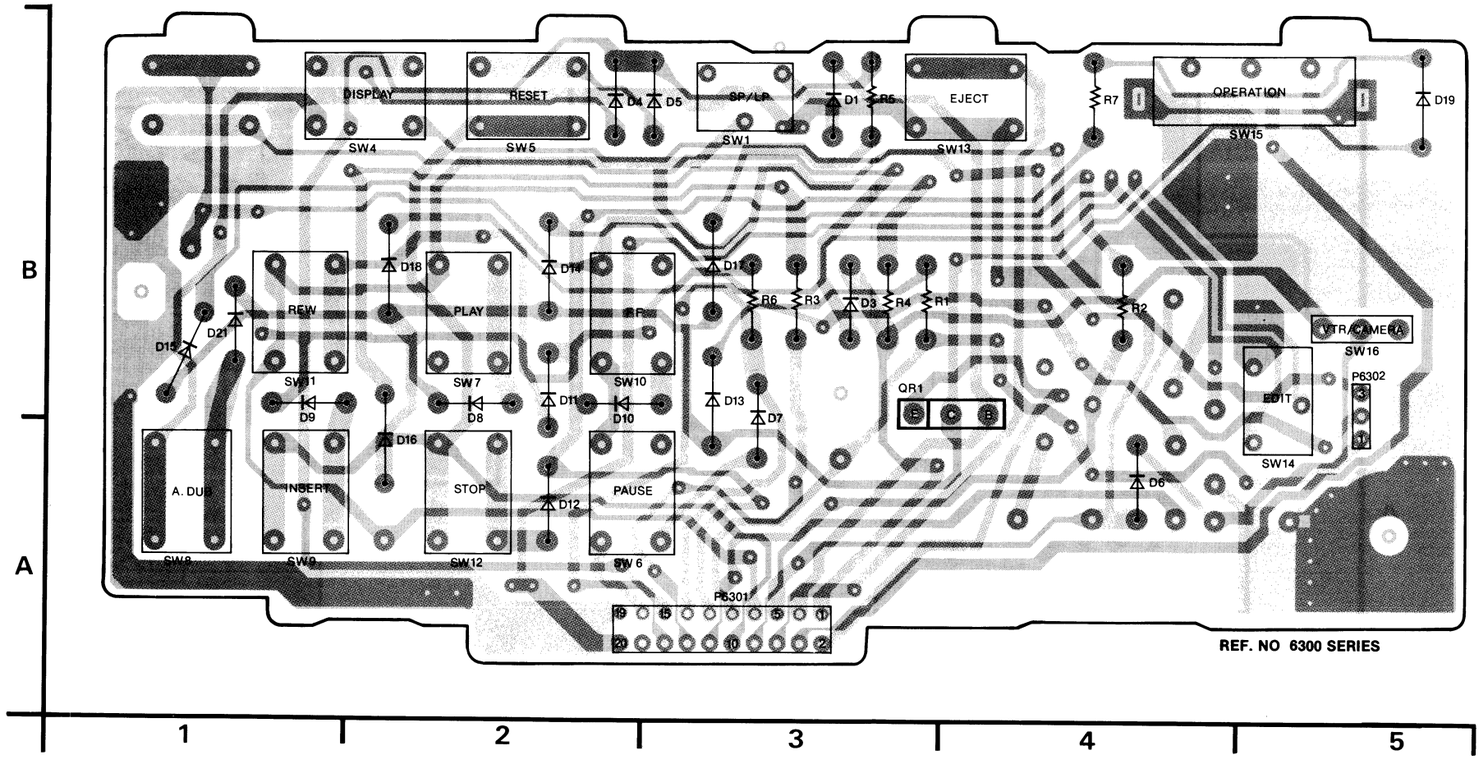

3-16. CAM

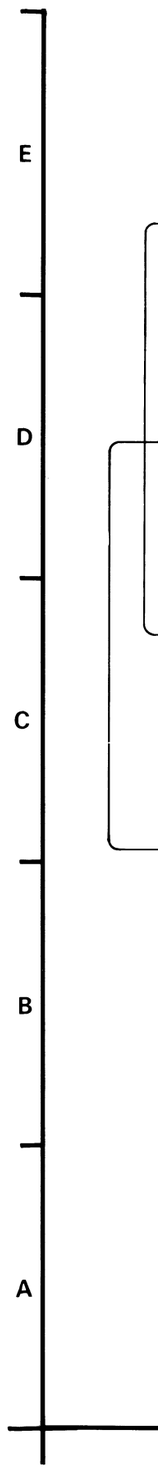

3-16. CAMERA INTERCONNECTION SCHEMATIC DIAGRAM

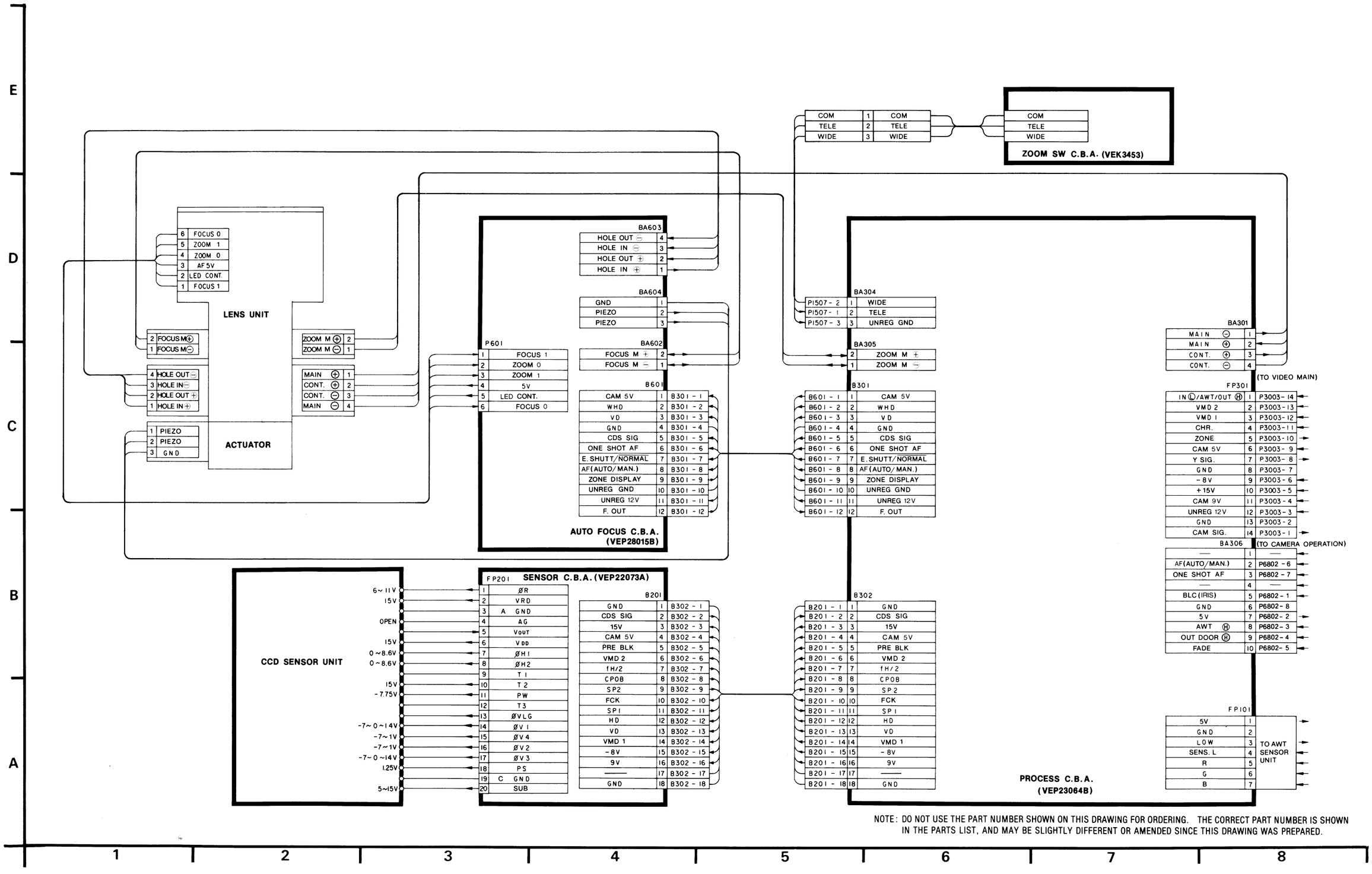

NOTE: DO NOT USE THE PART NUMBER SHOWN ON THIS DRAWING FOR ORDERING. THE CORRECT PART NUMBER IS SHOWN IN THE PARTS LIST, AND MAY BE SLIGHTLY DIFFERENT OR AMENDED SINCE THIS DRAWING WAS PREPARED.

3-17. SP HEAD AMP SCHEMATIC DIAGRAM

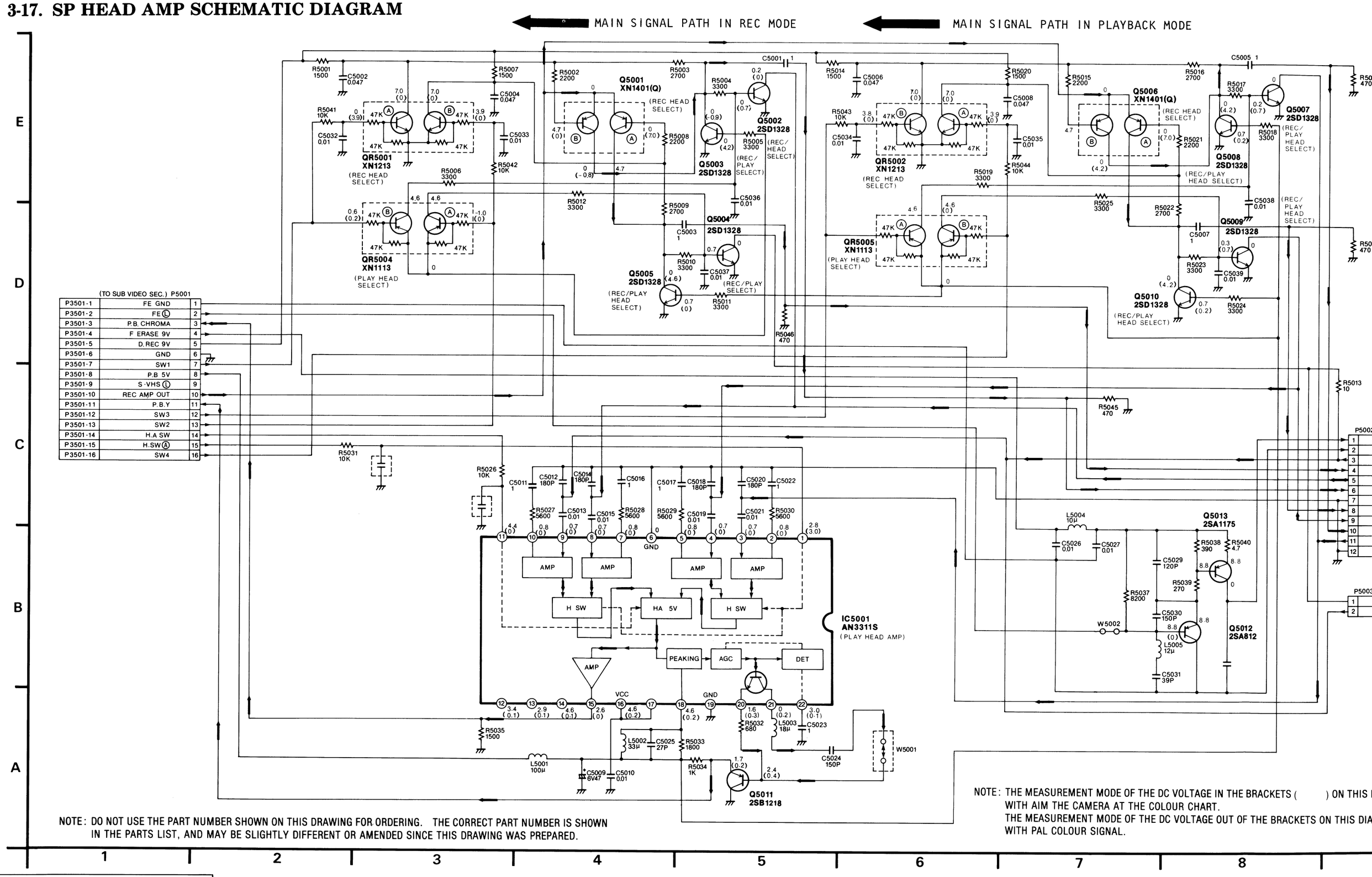

NOTE: DO NOT USE THE PART NUMBER SHOWN ON THIS DRAWING FOR ORDERING. THE CORRECT PART NUMBER IS SHOWN IN THE PARTS LIST, AND MAY BE SLIGHTLY DIFFERENT OR AMENDED SINCE THIS DRAWING WAS PREPARED.

NOTE: THE MEASUREMENT MODE OF THE DC VOLTAGE IN THE BRACKETS ( ) ON THIS
WITH AIM THE CAMERA AT THE COLOUR CHART.
THE MEASUREMENT MODE OF THE DC VOLTAGE OUT OF THE BRACKETS ON THIS DIA
WITH PAL COLOUR SIGNAL.

Back Page:
CAMERA INTERCONNECTION Section

3-18. SP HEAD AMP C.B.A. (VEP05112B)

SP HEAD AMP C.B.A.	
Transistor	
Q5001	A-2 Ⓒ
Q5002	B-4 Ⓕ
Q5003	B-4 Ⓕ
Q5004	A-4 Ⓕ
Q5005	A-5 Ⓕ
Q5006	B-3 Ⓕ
Q5007	B-1 Ⓒ
Q5008	B-3 Ⓕ
Q5009	B-4 Ⓕ
Q5010	B-4 Ⓕ
Q5011	B-2 Ⓒ
Q5012	A-4 Ⓕ
Q5013	A-1 Ⓒ
Transistor & Resistor	
QR5001	A-3 Ⓕ
QR5002	B-2 Ⓒ
QR5004	A-4 Ⓕ
QR5005	B-4 Ⓕ
Integrated Circuit	
IC5001	A-2 Ⓒ
Connector	
P5001	A-2 Ⓒ
P5001	A-3 Ⓕ
P5002	B-1 Ⓒ
P5003	A-2 Ⓒ

ADDRESS INFORMATION
Ⓒ ··· COMPONENT SIDE
Ⓕ ··· FOIL SIDE

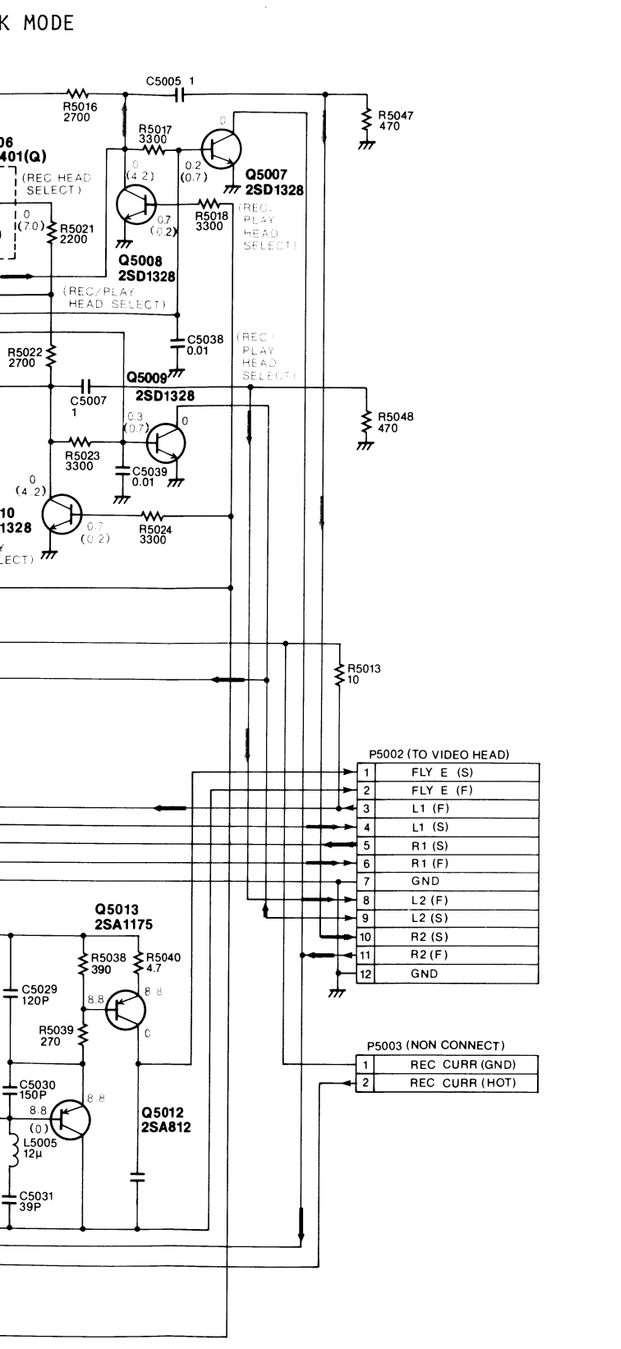

E DC VOLTAGE IN THE BRACKETS ( ) ON THIS DIAGRAM IS RECORD MODE
COLOUR CHART.
E DC VOLTAGE OUT OF THE BRACKETS ON THIS DIAGRAM IS PLAYBACK MODE

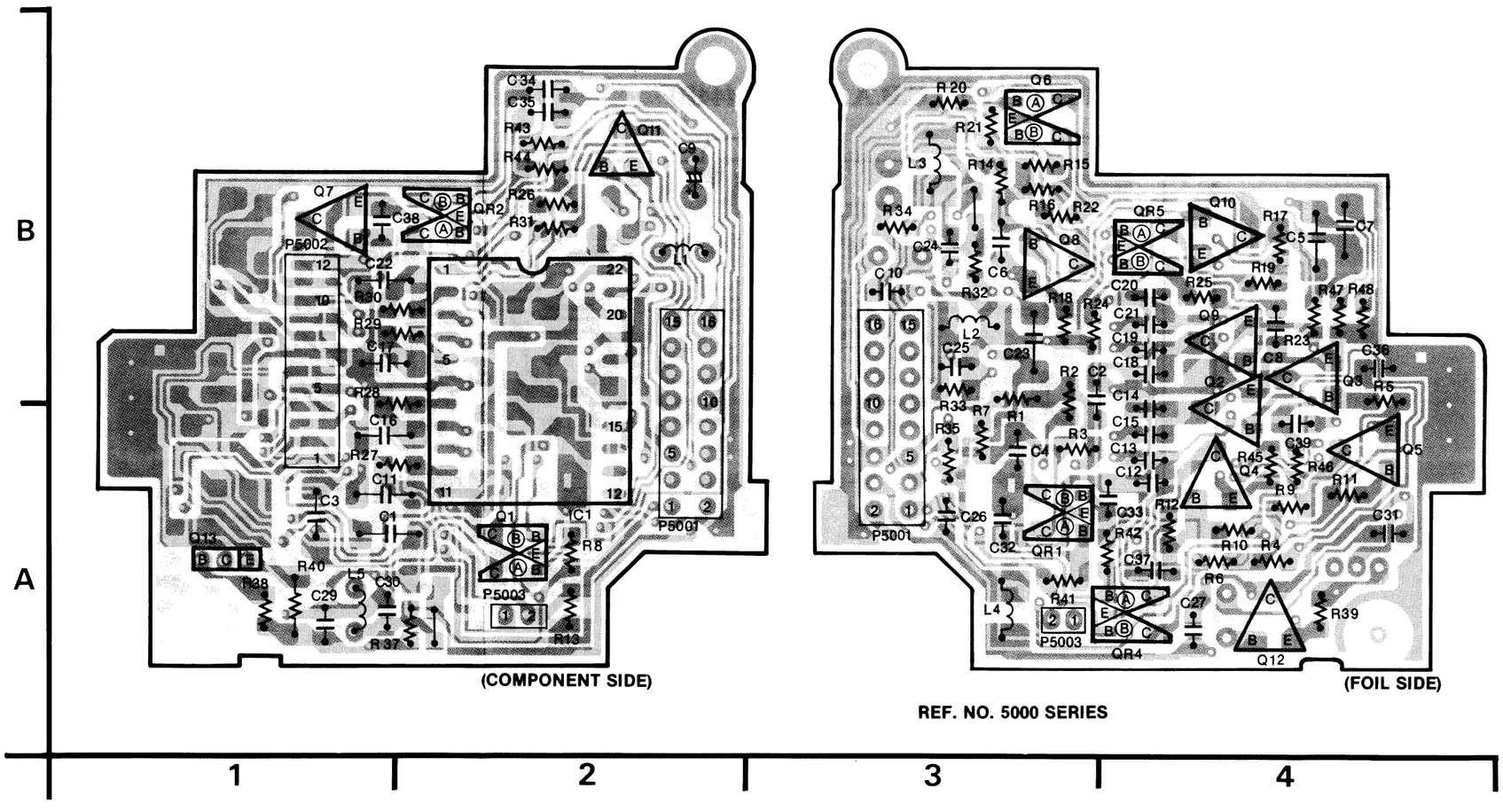

3-19. LP HEAD AMP SCHEMATIC DIAGRAM

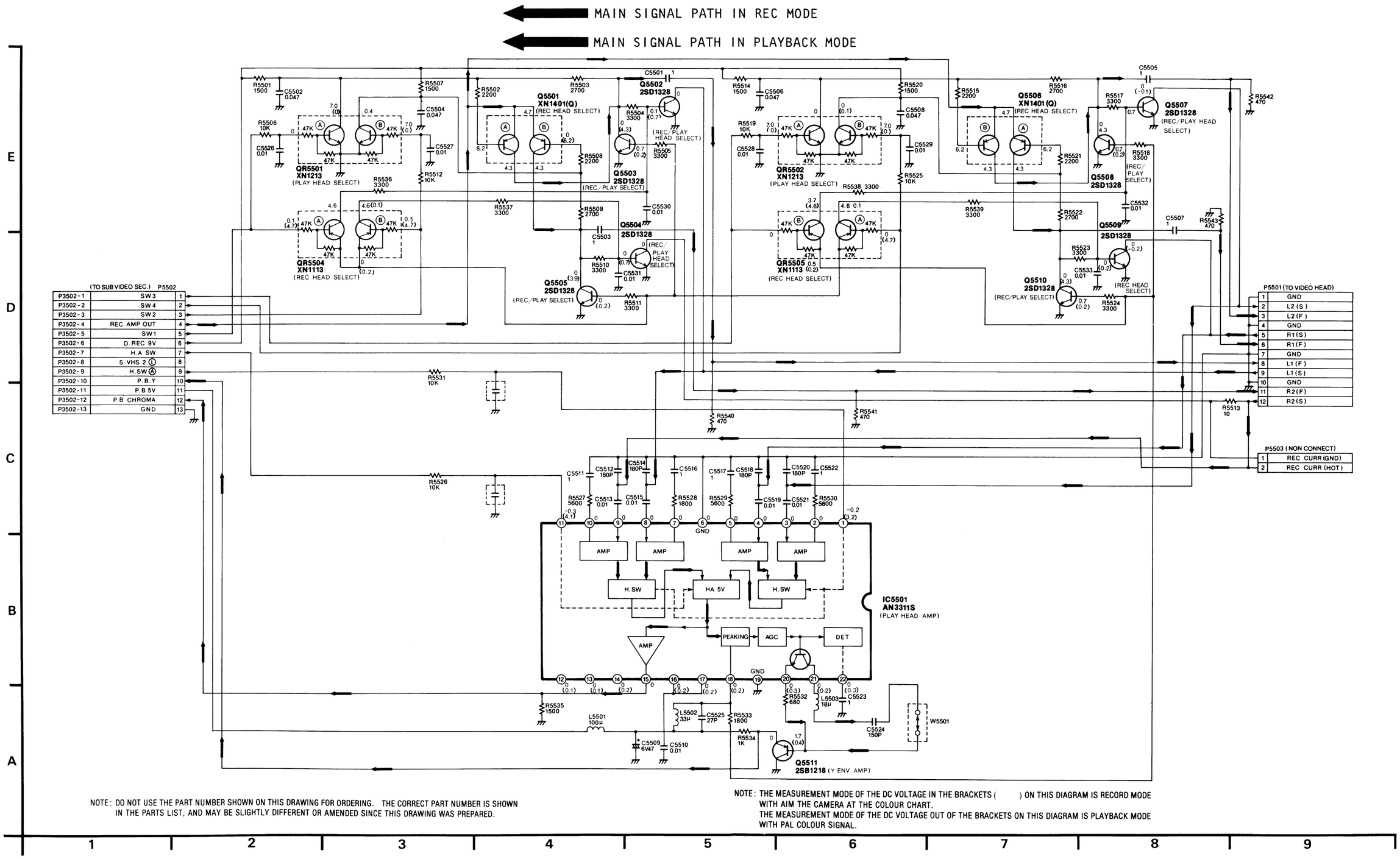

NOTE: DO NOT USE THE PART NUMBER SHOWN ON THIS DRAWING FOR ORDERING. THE CORRECT PART NUMBER IS SHOWN IN THE PARTS LIST, AND MAY BE SLIGHTLY DIFFERENT OR AMENDED SINCE THIS DRAWING WAS PREPARED.

NOTE: THE MEASUREMENT MODE OF THE DC VOLTAGE IN THE BRACKETS ( ) ON THIS DIAGRAM IS RECORD MODE WITH AIM THE CAMERA AT THE COLOUR CHART.
THE MEASUREMENT MODE OF THE DC VOLTAGE OUT OF THE BRACKETS ON THIS DIAGRAM IS PLAYBACK MODE WITH PAL COLOUR SIGNAL.

3-20. LP HEAD AMP C.B.A. (VEP05115B)

LP HEAD AMP C.B.A.	
Transistor	
Q5501	B-4 Ⓕ
Q5502	B-2 Ⓒ
Q5503	A-3 Ⓕ
Q5504	B-3 Ⓕ
Q5505	B-2 Ⓒ
Q5506	A-4 Ⓕ
Q5507	A-2 Ⓒ
Q5508	A-3 Ⓕ
Q5509	A-2 Ⓒ
Q5510	A-3 Ⓕ
Q5511	B-4 Ⓕ
Transistor & Resistor	
QR5501	B-1 Ⓒ
QR5502	A-4 Ⓕ
QR5504	B-4 Ⓕ
QR5505	A-4 Ⓕ
Integrated Circuit	
IC5501	A-1 Ⓒ
Connector	
P5501	B-2 Ⓒ
P5502	B-1 Ⓒ
P5503	B-2 Ⓒ

ADDRESS INFORMATION
Ⓒ ··· COMPONENT SIDE
Ⓕ ··· FOIL SIDE

DEO HEAD)

CONNECT)
CURR (GND)
CURR (HOT)

9

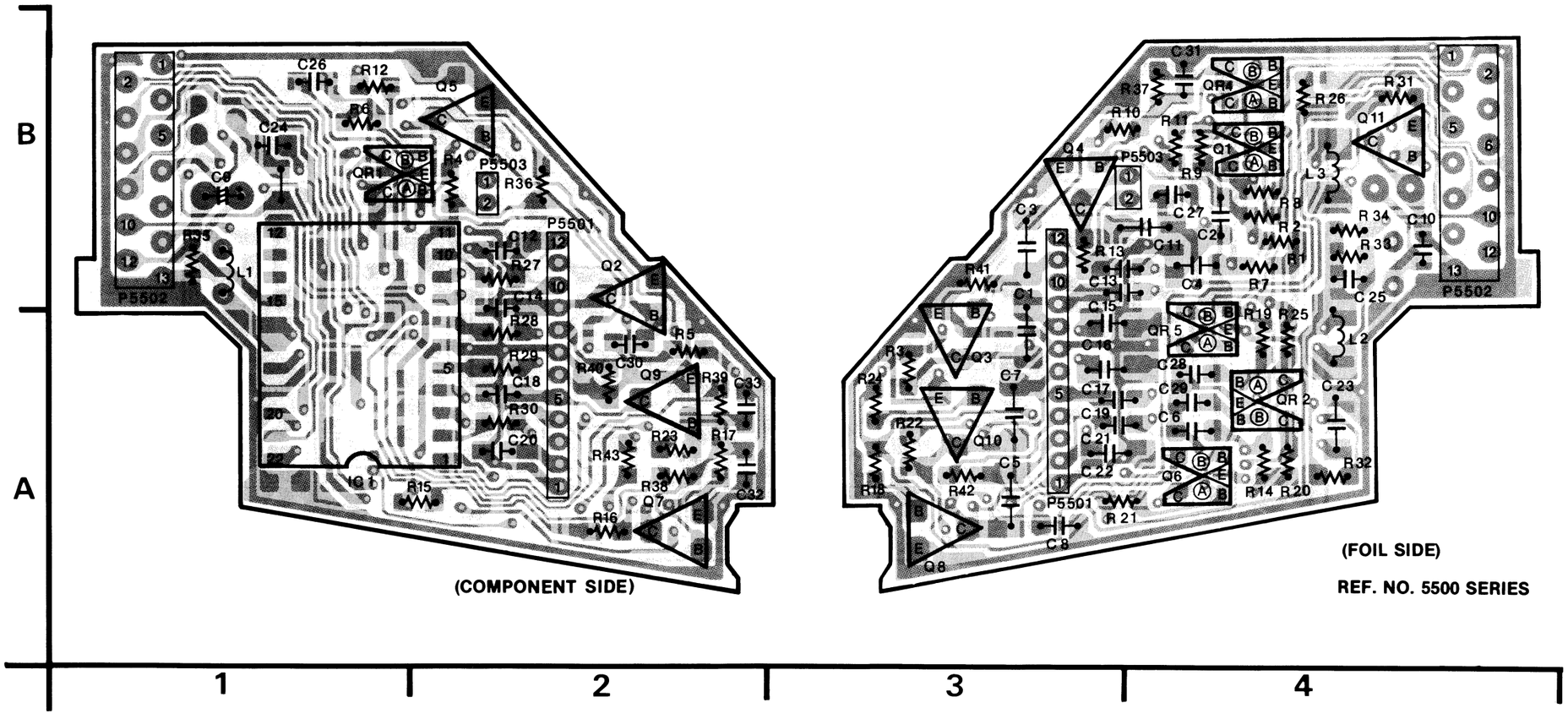

3-21. LUMINANCE/CHROMINANCE C.B.A. (VEP03471B)

LUMINANCE & CHROMINANCE C.B.A.

Transistor		
Q3001	C-8	Ⓕ
Q3002	C-1	Ⓒ
Q3003	C-2	Ⓒ
Q3007	D-8	Ⓕ
Q3008	D-8	Ⓕ
Q3009	D-1	Ⓒ
Q3010	B-4	Ⓒ
Q3012	D-6	Ⓕ
Q8001	C-8	Ⓕ
Q8002	B-7	Ⓕ
Q8003	A-5	Ⓕ
Q8004	A-6	Ⓕ
Q8005	A-7	Ⓕ
Q8010	A-1	Ⓒ
Q8011	B-1	Ⓒ
Q8012	B-1	Ⓒ
Q8013	B-1	Ⓒ
Q8014	A-9	Ⓕ
Q8015	B-7	Ⓒ
Q8016	B-8	Ⓕ
Q8017	B-2	Ⓒ
Q8018	A-8	Ⓕ
Q8019	B-8	Ⓒ
Q8020	A-8	Ⓕ
Q8022	A-4	Ⓒ
Q8023	A-4	Ⓒ
Q8024	A-5	Ⓒ

Transistor & Resistor		
QR3001	C-8	Ⓕ
QR3002	D-4	Ⓒ
QR3003	C-8	Ⓕ
QR3005	C-8	Ⓕ
QR3006	C-8	Ⓕ
QR3007	C-7	Ⓕ
QR3008	D-4	Ⓒ
QR3009	D-4	Ⓒ
QR3012	C-5	Ⓕ
QR3015	D-7	Ⓕ
QR3022	D-6	Ⓕ
QR3023	C-5	Ⓕ
QR3025	D-4	Ⓒ
QR3027	C-8	Ⓕ
QR3028	D-8	Ⓕ
QR3029	D-6	Ⓕ
QR8001	C-8	Ⓕ
QR8002	B-4	Ⓒ
QR8003	A-6	Ⓕ
QR8004	A-7	Ⓕ
QR8010	B-8	Ⓕ
QR8011	B-8	Ⓕ
QR8012	A-5	Ⓒ

Integrated Circuit		
IC3001	D-7	Ⓕ
IC3002	C-3	Ⓒ
IC3003	D-4	Ⓒ
IC8001	B-6	Ⓕ
IC8002	B-4	Ⓒ
IC8003	B-9	Ⓕ
IC8004	A-1	Ⓒ
IC8005	A-9	Ⓕ
IC8006	B-2	Ⓒ

Test Point		
TP3001	D-5	Ⓒ
TP3001	D-6	Ⓕ
TP3002	C-2	Ⓒ
TP3002	C-7	Ⓕ
TP3003	C-4	Ⓒ
TP3003	C-7	Ⓕ
TP3004	C-3	Ⓒ
TP3004	C-8	Ⓕ
TP3005	B-3	Ⓒ
TP3005	C-7	Ⓕ
TP8001	B-1	Ⓒ
TP8001	B-9	Ⓕ
TP8002	B-3	Ⓒ
TP8002	B-8	Ⓕ
TP8003	A-3	Ⓒ
TP8003	A-8	Ⓕ
TP8004	B-2	Ⓒ
TP8004	B-9	Ⓕ
TP8005	B-2	Ⓒ
TP8005	B-9	Ⓕ
TP8006	A-2	Ⓒ
TP8006	A-8	Ⓕ

Adjustment		
VR3001	C-8	Ⓕ
VR3002	D-5	Ⓕ
VR3003	C-6	Ⓕ
VR3004	B-6	Ⓕ
VR3006	B-5	Ⓕ
VR3007	B-5	Ⓕ
VR3009	C-7	Ⓕ
VR3010	D-8	Ⓕ
VR3012	B-5	Ⓕ
VR3013	C-6	Ⓕ
VR8001	B-7	Ⓕ
VR8002	B-6	Ⓕ
VR8005	B-9	Ⓕ
VR8006	B-7	Ⓕ
VR8007	A-8	Ⓕ

Connector		
P3001	D-1	Ⓒ

ADDRESS INFORMATION
Ⓒ ··· COMPONENT SIDE
Ⓕ ··· FOIL SIDE

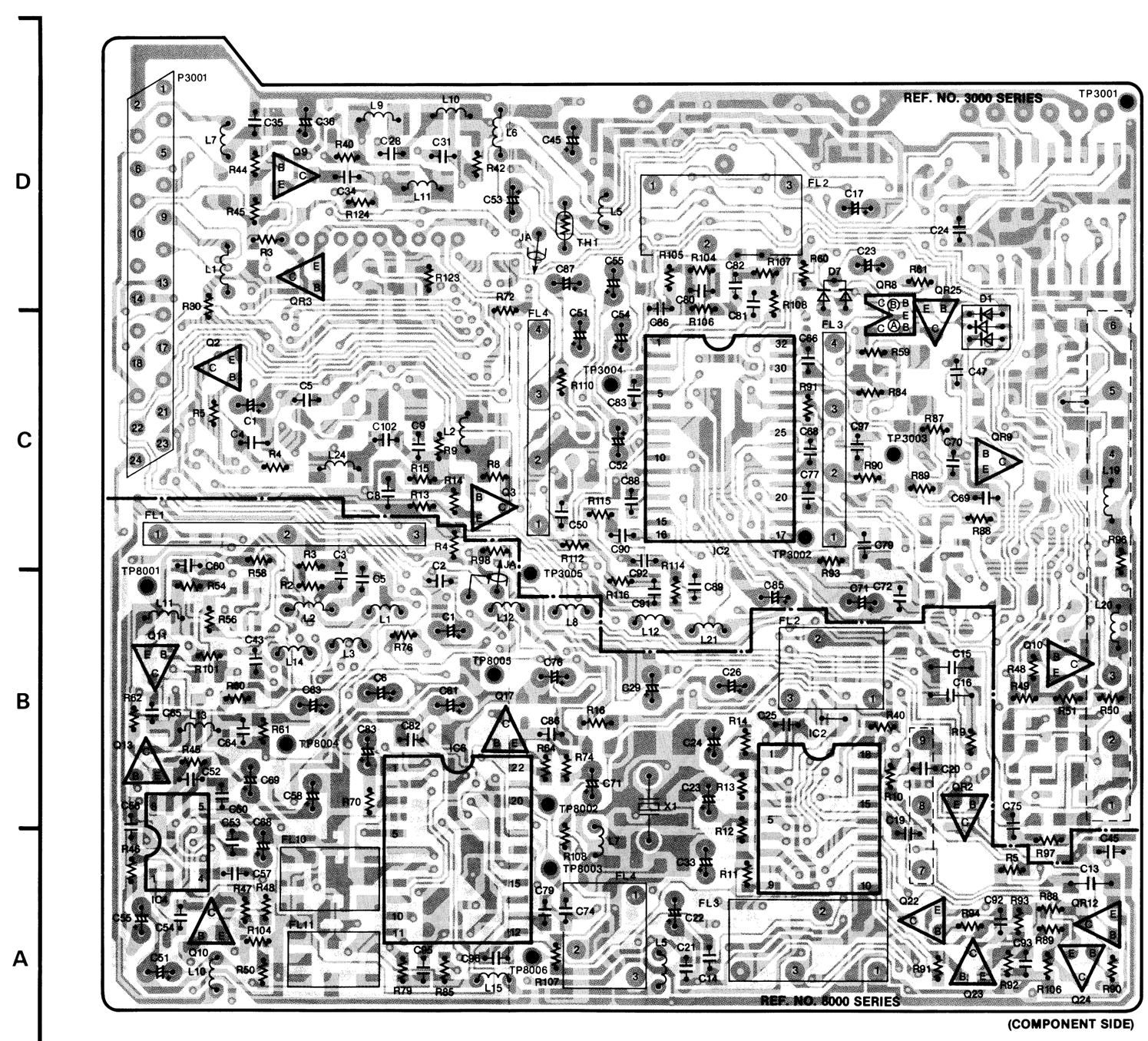

(COMPONENT SIDE)

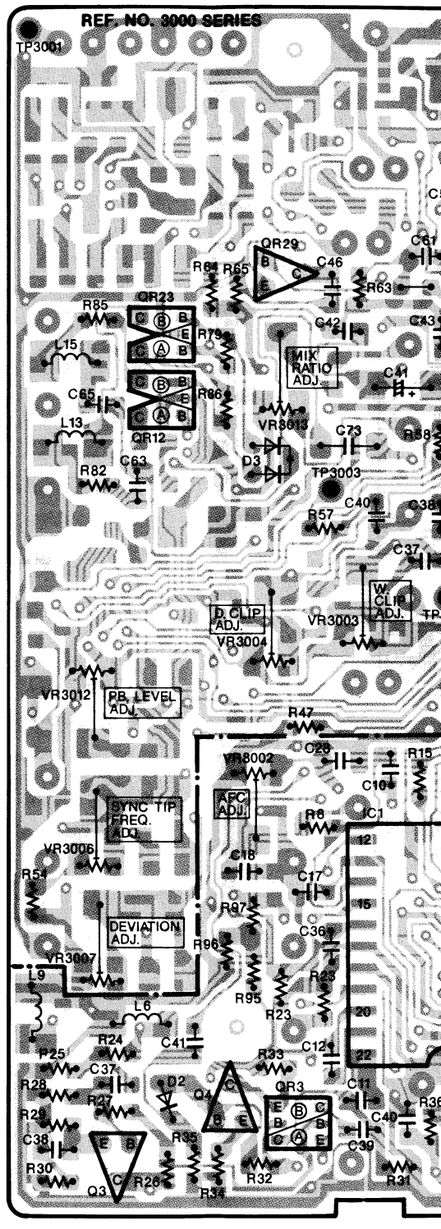

Back Page:
LP HEAD AMP Section

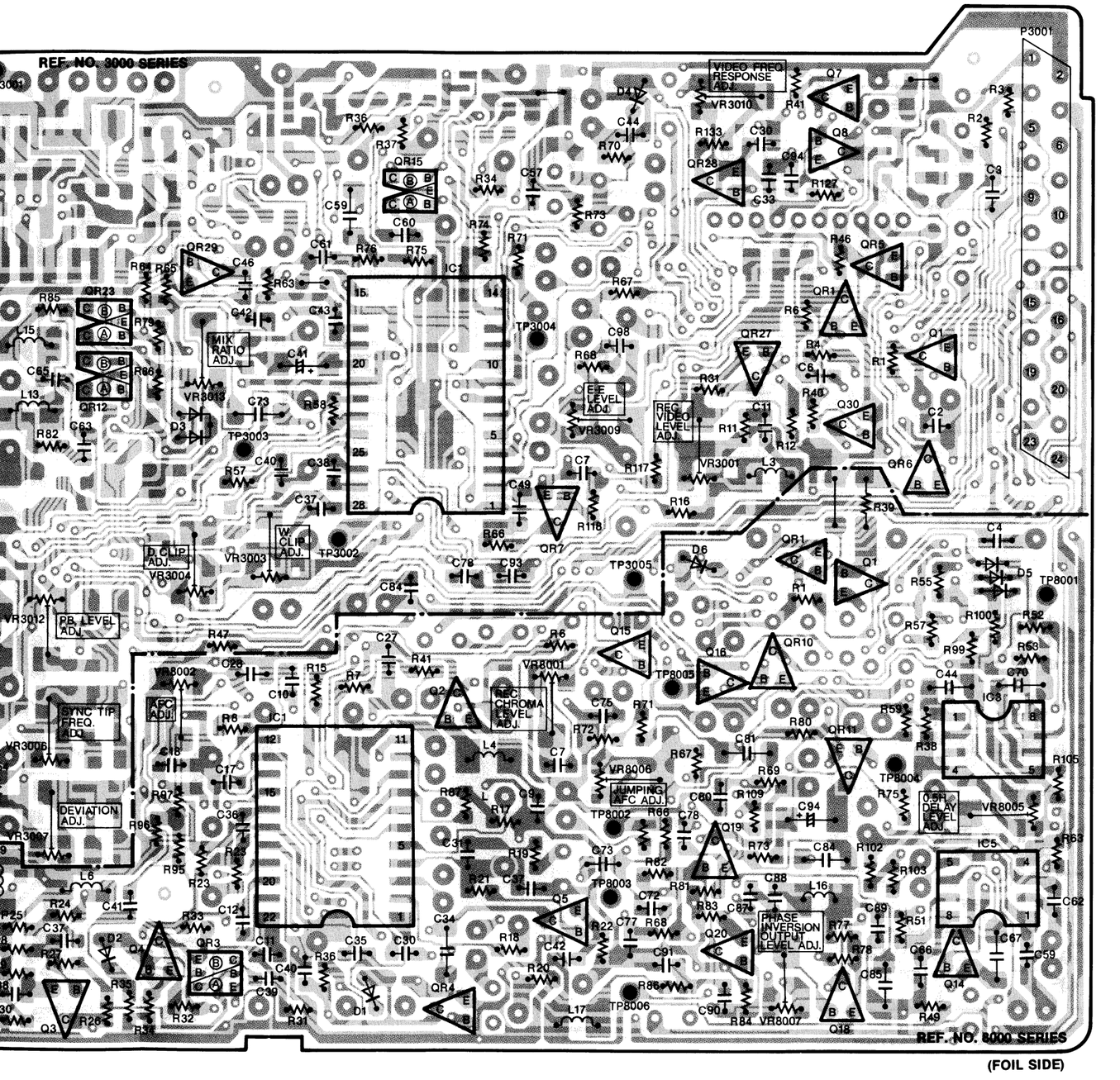

IC3001 (AN3217S)

PIN NO.	WAVEFORM	PIN NO.	WAVEFORM
1	0.3Vp-p (REC/P.B)	14	0.5Vp-p (REC) 0.4Vp-p (P.B)
2	5Vp-p (REC/P.B)	15	0.25Vp-p (REC)
4	0.8Vp-p (REC)	15	0.35Vp-p (P.B)
6	0.25Vp-p (P.B)	16	0.9Vp-p (REC)
8	0.45Vp-p (REC)	16	1.3Vp-p (P.B)
8	0.7Vp-p (P.B)	17	0.22Vp-p (REC) 0.35Vp-p (P.B)
10	1.7Vp-p (REC)	19	0.8Vp-p (REC)
10	2.2Vp-p (P.B)	19	1.2Vp-p (P.B)
12	0.4Vp-p (P.B)	22	0.25Vp-p (REC)
		25 26	0.68Vp-p (REC/P.B)

IC3002 (AN3321S)

PIN NO.	WAVEFORM
3	0.5Vp-p (P.B)
8	0.3Vp-p (P.B)
9	1.2Vp-p (P.B)
12, 13	0.2Vp-p (P.B)
16	80mVp-p (P.B)
17	1Vp-p (P.B)
19	0.3Vp-p (P.B)
20	0.2Vp-p (P.B)
24	1.2Vp-p (P.B)
27, 29	0.3Vp-p (P.B)
30	1Vp-p (P.B)

IC8002 (MN6163AS)

PIN NO.	WAVEFORM	PIN NO.	WAVEFORM
2	0.7Vp-p (REC/P.B)	13	5Vp-p (REC/P.B)
4	5Vp-p (REC)	14	5Vp-p (REC/P.B)
6	3.2Vp-p (REC/P.B)	16	5Vp-p (REC/P.B)
10	5Vp-p (P.B)	18	5Vp-p (REC/P.B)

IC8001 (AN6367S)

PIN NO.	WAVEFORM	PIN NO.	WAVEFORM
4	4.43MHz 0.52Vp-p (REC/P.B)	14	0.55Vp-p (REC) 0.5Vp-p (P.B)
5	4.43MHz 0.7Vp-p (REC/P.B)	16	1.2Vp-p (P.B)
6	1.8Vp-p (REC/P.B)	18	0.15Vp-p (REC)
7	1Vp-p (REC/P.B)	20, 21	0.3Vp-p (REC/P.B)
9	625KHz 0.7Vp-p (REC/P.B)	22	0.12Vp-p (REC)
11	5.02MHz 0.7Vp-p (REC/P.B)	22	0.3Vp-p (P.B)

IC8006 (AN3592S)

PIN NO.	WAVEFORM	PIN NO.	WAVEFORM
1	3.2Vp-p (P.B)	14	170mVp-p (P.B)
2	1.3Vp-p (P.B)	15	4.43MHz 0.5Vp-p (P.B)
8	0.6Vp-p (P.B)	17	4Vp-p (P.B)
10	0.2Vp-p (P.B)	19	0.4Vp-p (P.B)
11	0.6Vp-p (P.B)	20	2.2Vp-p (P.B)
12	0.2Vp-p (P.B)		

3-22. LUMINANCE/CHROMINANCE SCHEMATIC DIAGRAM

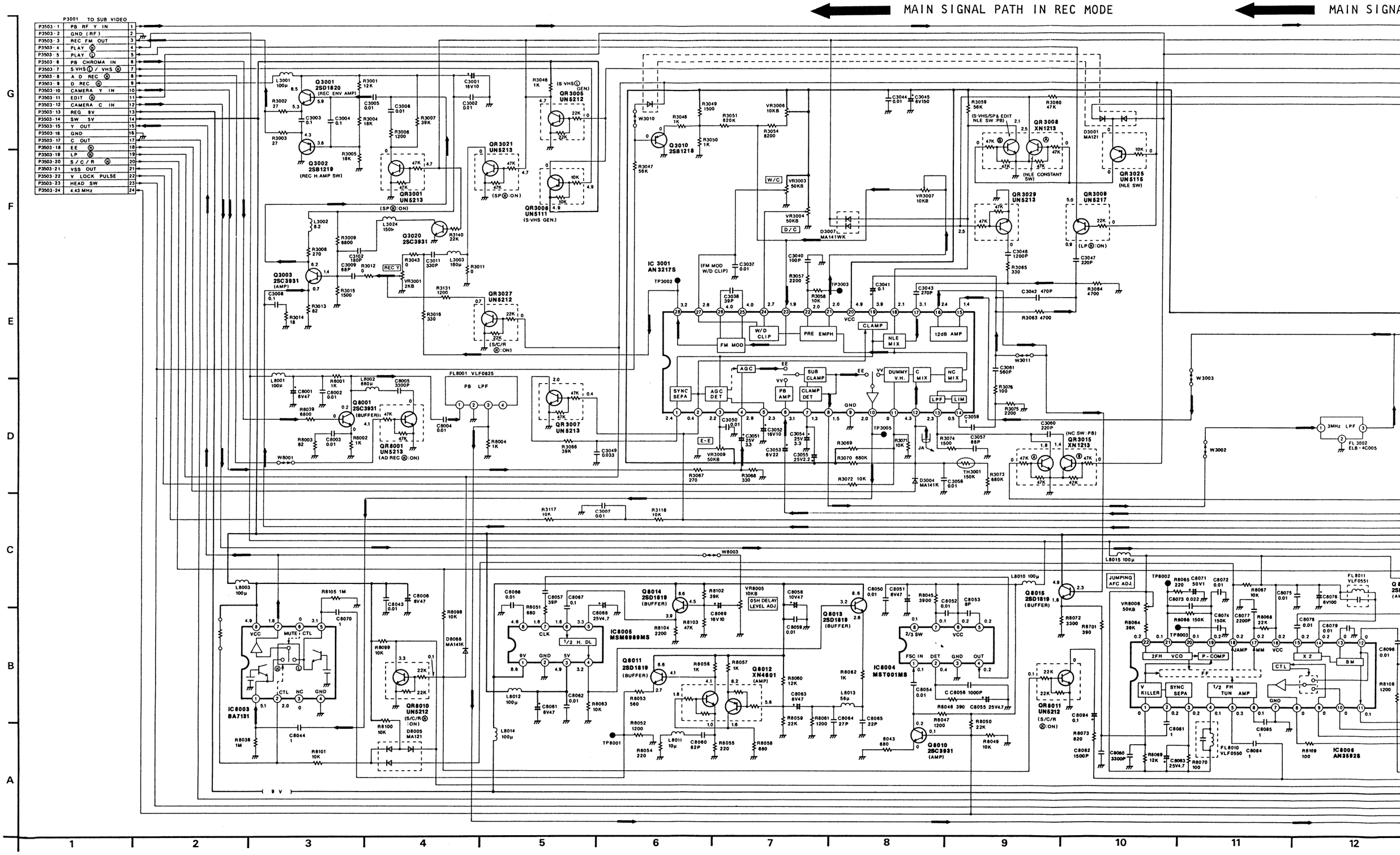

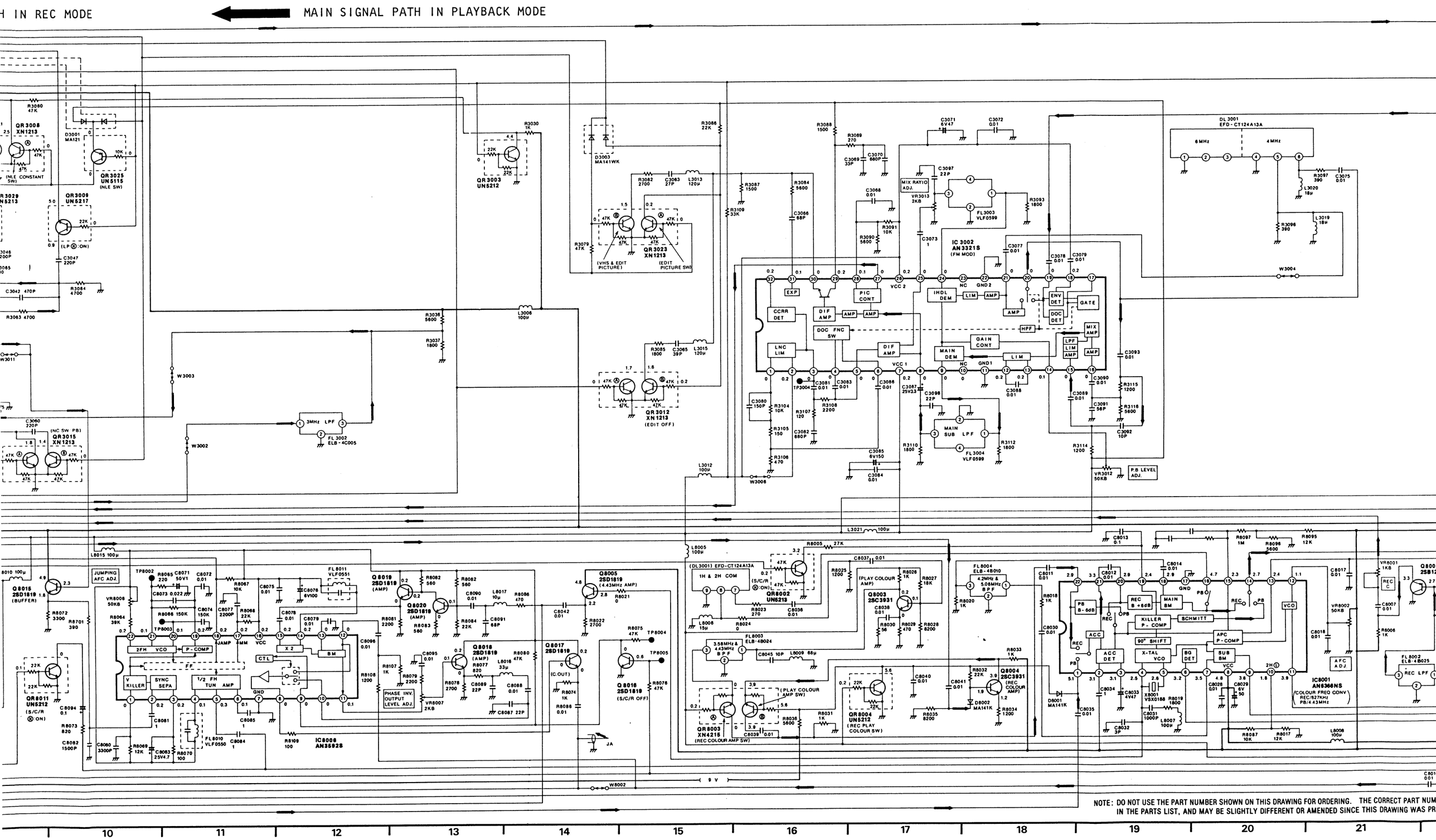
H IN REC MODE
MAIN SIGNAL PATH IN PLAYBACK MODE
IC 3002
AN3321S
(FM MOD)
IC8006
AN3592S
IC8001
AN6366NS
(COLOUR FREQ CONV
REC/627KHz
PB/4.43MHz)
DL 3001
EFD-CT124A13A
6MHz
4MHz
P.B LEVEL ADJ.
JUMPING AFC ADJ.
PHASE INV. OUTPUT LEVEL ADJ.
(VHS & EDIT PICTURE)
(EDIT PICTURE SW)
(EDIT OFF)
(NLE CONSTANT SW)
(NLE SW)
(NC SW PB)
(DL3001) EFD-CT124A13A
1H & 2H COM
(PLAY COLOUR AMP)
(PLAY COLOUR AMP SW)
(REC COLOUR AMP SW)
(REC PLAY COLOUR SW)
(REC COLOUR AMP)
(S/C/R ON)
(S/C/R OFF)
(C.OUT)
(4.43MHz AMP)
(AMP)
(BUFFER)
9 V
NOTE: DO NOT USE THE PART NUMBER SHOWN ON THIS DRAWING FOR ORDERING. THE CORRECT PART NUM
IN THE PARTS LIST, AND MAY BE SLIGHTLY DIFFERENT OR AMENDED SINCE THIS DRAWING WAS PR

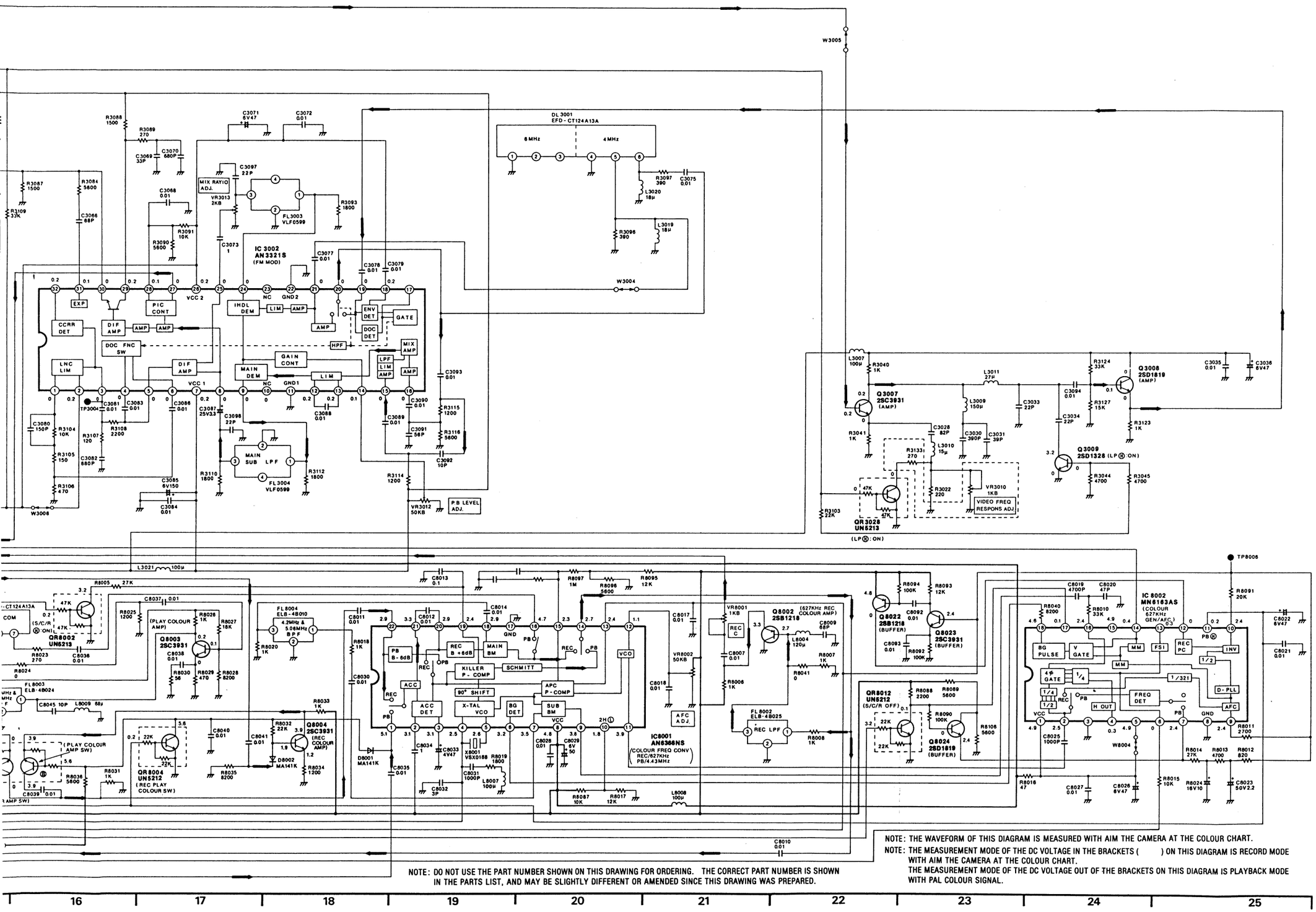

NOTE: DO NOT USE THE PART NUMBER SHOWN ON THIS DRAWING FOR ORDERING. THE CORRECT PART NUMBER IS SHOWN IN THE PARTS LIST, AND MAY BE SLIGHTLY DIFFERENT OR AMENDED SINCE THIS DRAWING WAS PREPARED.

NOTE: THE WAVEFORM OF THIS DIAGRAM IS MEASURED WITH AIM THE CAMERA AT THE COLOUR CHART.

NOTE: THE MEASUREMENT MODE OF THE DC VOLTAGE IN THE BRACKETS ( ) ON THIS DIAGRAM IS RECORD MODE WITH AIM THE CAMERA AT THE COLOUR CHART.
THE MEASUREMENT MODE OF THE DC VOLTAGE OUT OF THE BRACKETS ON THIS DIAGRAM IS PLAYBACK MODE WITH PAL COLOUR SIGNAL.

LUMINANCE & CHROMINANCE CIRCUIT TP (Test Point) WAVE FORM (REF No. 3000 Series)

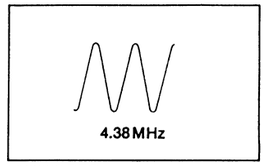

TP3002 REC
0.2V/0.1μsec. div. 0.6Vp-p

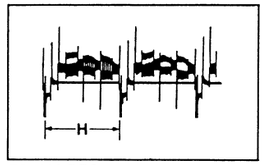

TP3003 REC
0.1V/20μsec. div. 0.5Vp-p

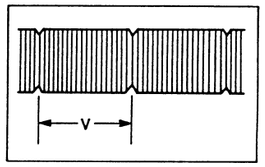

TP3005 PLAY
50mV/5msec. div. 100Vp-p

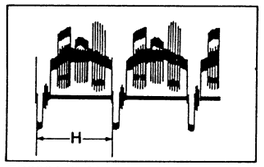

TP8001 PLAY
0.5V/20μsec. div. 1Vp-p

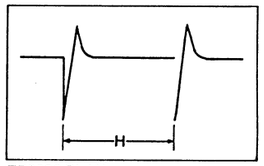

TP8002 PLAY
50mV/20μsec. div. 160Vp-p

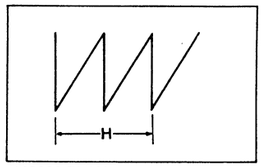

TP8003 PLAY
0.5V/20μsec. div.

,Next Page:
POWER SUPPLY/AUDIO/SUB VIDEO & SERVO Section

3-23. POWER SUPPLY/AUDIO/SUB VIDEO SCHEMATIC DIAGRAM

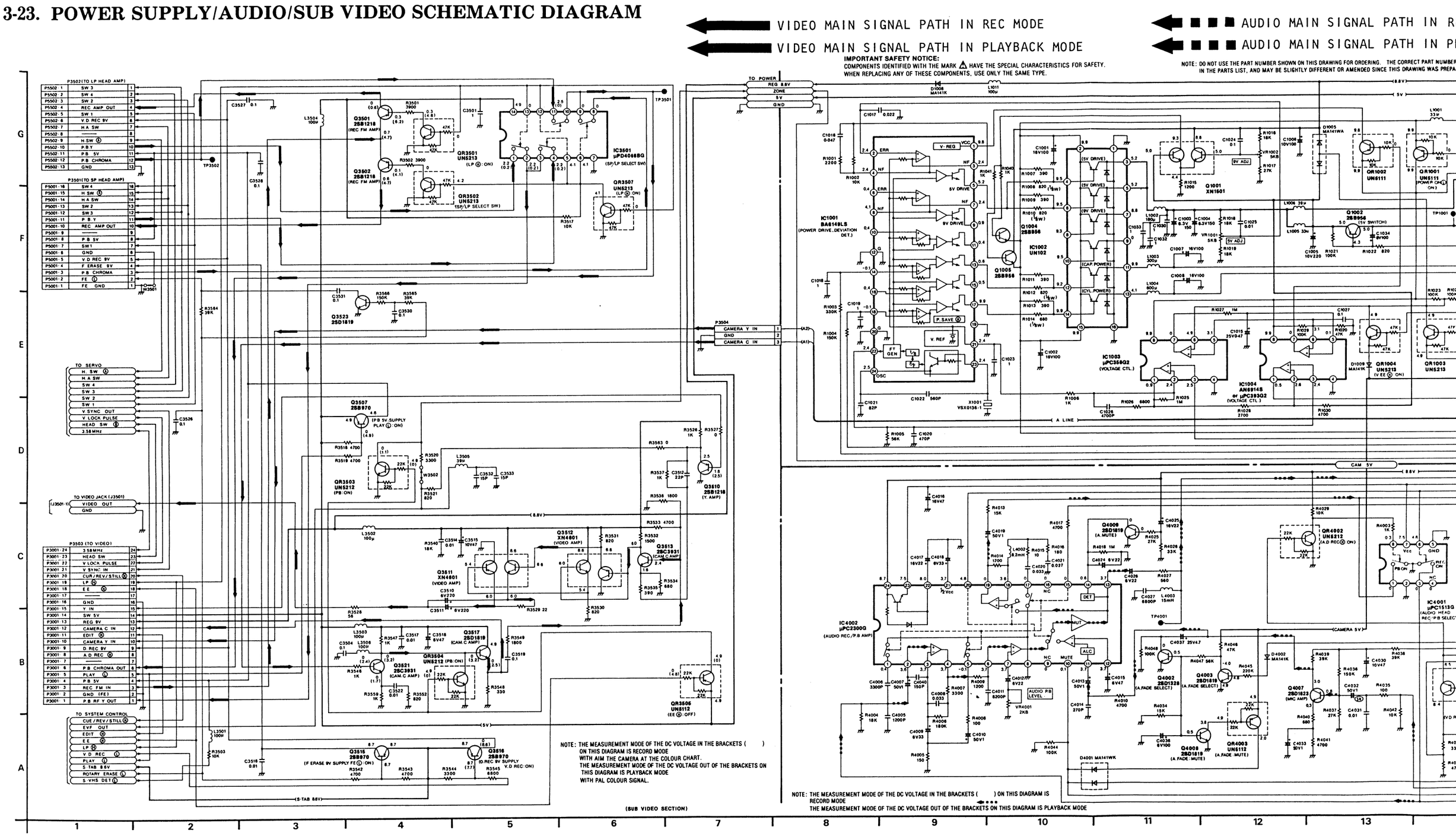

MODE

YBACK MODE

AUDIO MAIN SIGNAL PATH IN REC MODE

AUDIO MAIN SIGNAL PATH IN PLAYBACK MODE

ECIAL CHARACTERISTICS FOR SAFETY.
THE SAME TYPE.

NOTE: DO NOT USE THE PART NUMBER SHOWN ON THIS DRAWING FOR ORDERING. THE CORRECT PART NUMBER IS SHOWN IN THE PARTS LIST, AND MAY BE SLIGHTLY DIFFERENT OR AMENDED SINCE THIS DRAWING WAS PREPARED.

NOTE: THE MEASUREMENT MODE OF THE DC VOLTAGE ON THIS DIAGRAM IS STOP MODE.

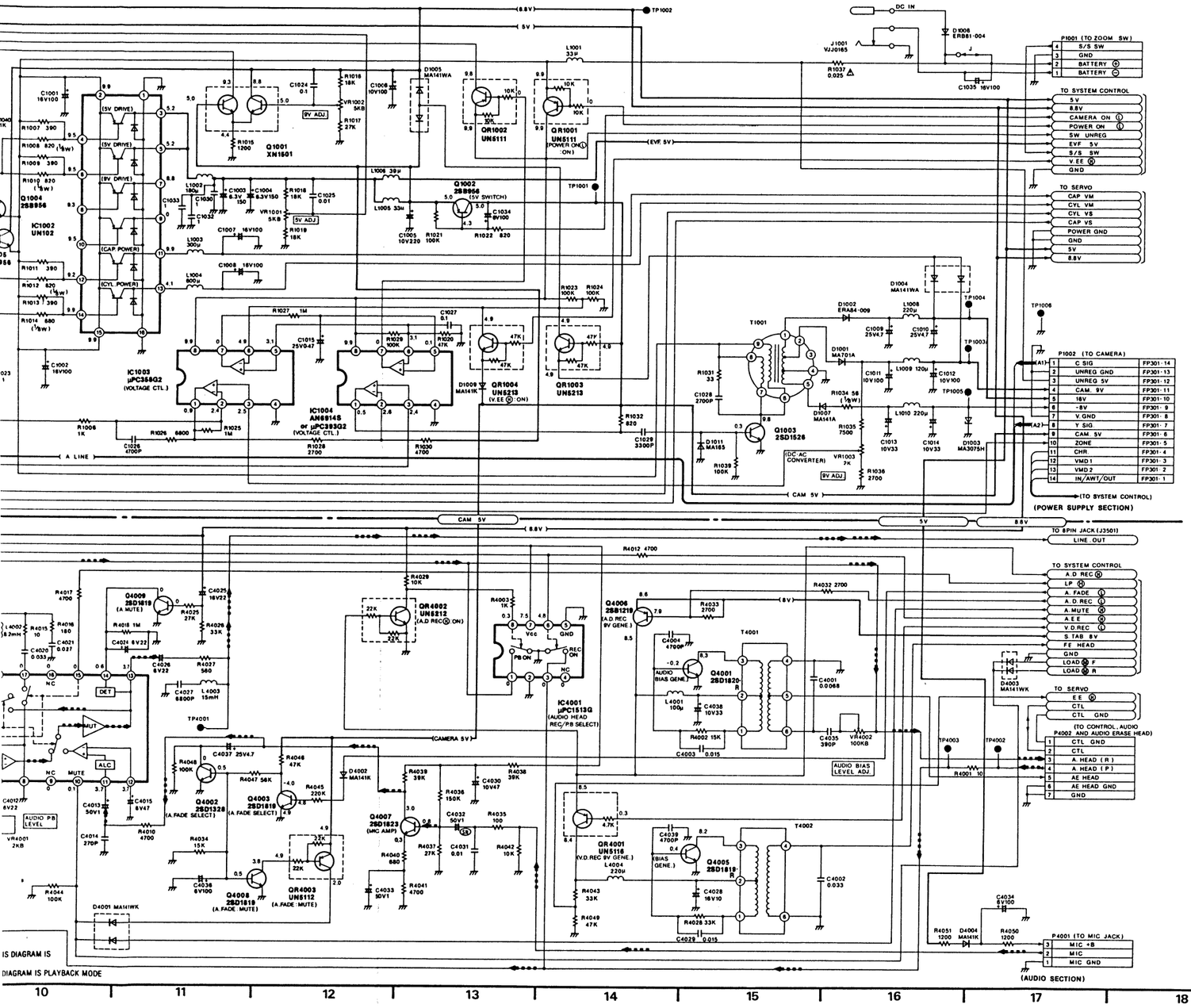

3-24. SERVO SCHEMATIC DIAGRAM

CYLINDER

CYLINDER

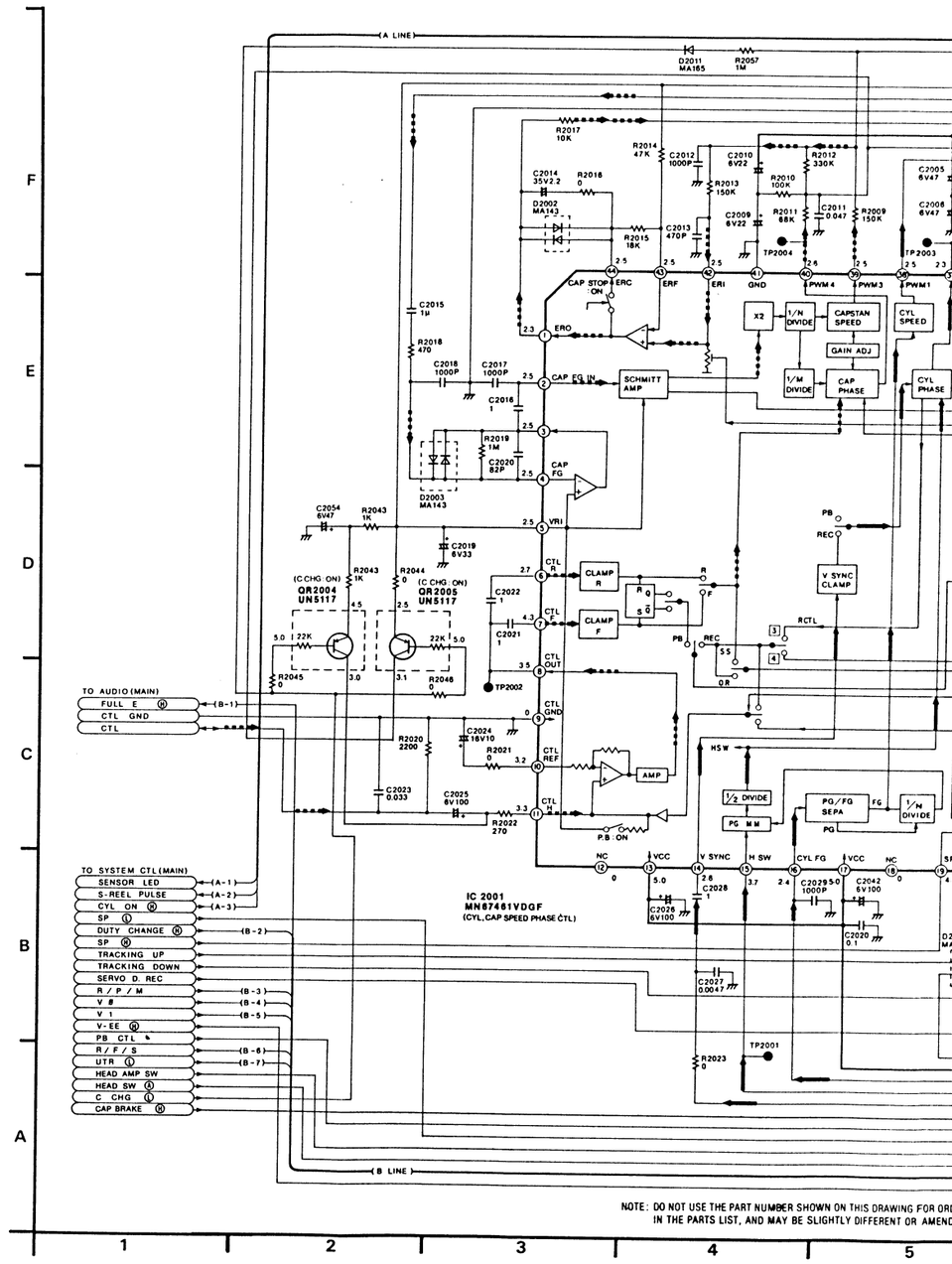

3-24. SERVO SCHEMATIC DIAGRAM

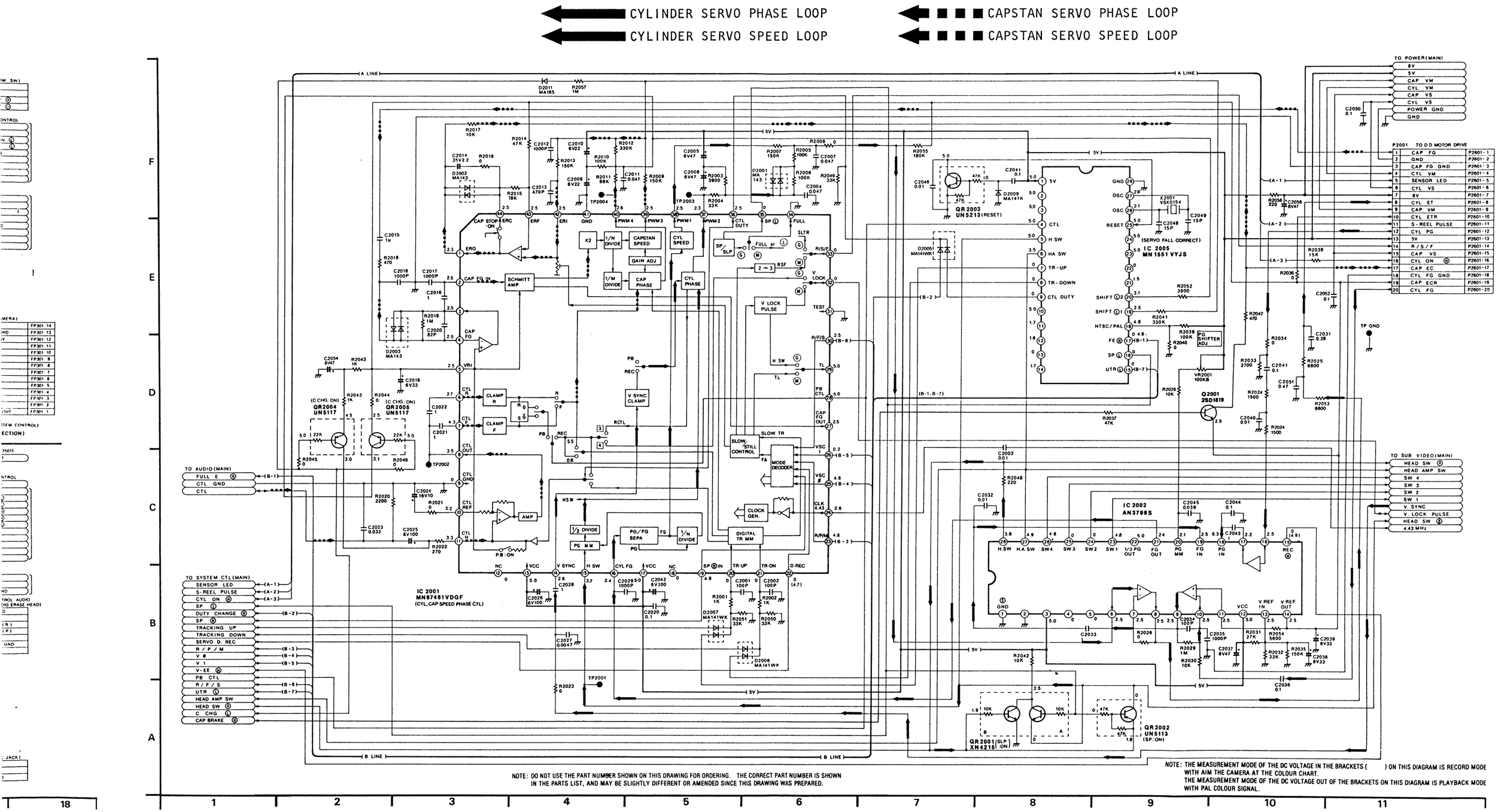

NOTE: DO NOT USE THE PART NUMBER SHOWN ON THIS DRAWING FOR ORDERING. THE CORRECT PART NUMBER IS SHOWN IN THE PARTS LIST, AND MAY BE SLIGHTLY DIFFERENT OR AMENDED SINCE THIS DRAWING WAS PREPARED.

NOTE: THE MEASUREMENT MODE OF THE DC VOLTAGE IN THE BRACKETS ( ) ON THIS DIAGRAM IS RECORD MODE WITH AIM THE CAMERA AT THE COLOUR CHART.
THE MEASUREMENT MODE OF THE DC VOLTAGE OUT OF THE BRACKETS ON THIS DIAGRAM IS PLAYBACK MODE WITH PAL COLOUR SIGNAL.

3-25. MAIN (POWER SUPPLY/AUDIO/SUB VIDEO/SERVO/SYSTEM CONTROL) C.B.A. (VEP06487A)

SERVO CIRCUIT TP (Test Point)
WAVE FORM (REF No. 2000 Series)

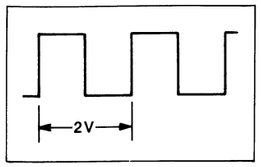

TP2001
2V/10msec. div. 4Vp-p

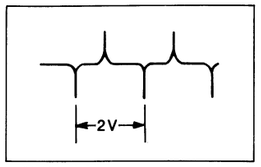

TP2002 PLAY
0.5V/10msec. div. 1.8Vp-p

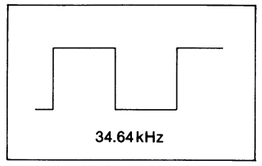

TP2003/TP2004 REC/PLAY
2V/10μsec. div. 5Vp-p

MAIN C.B.A. (VEP06487A)

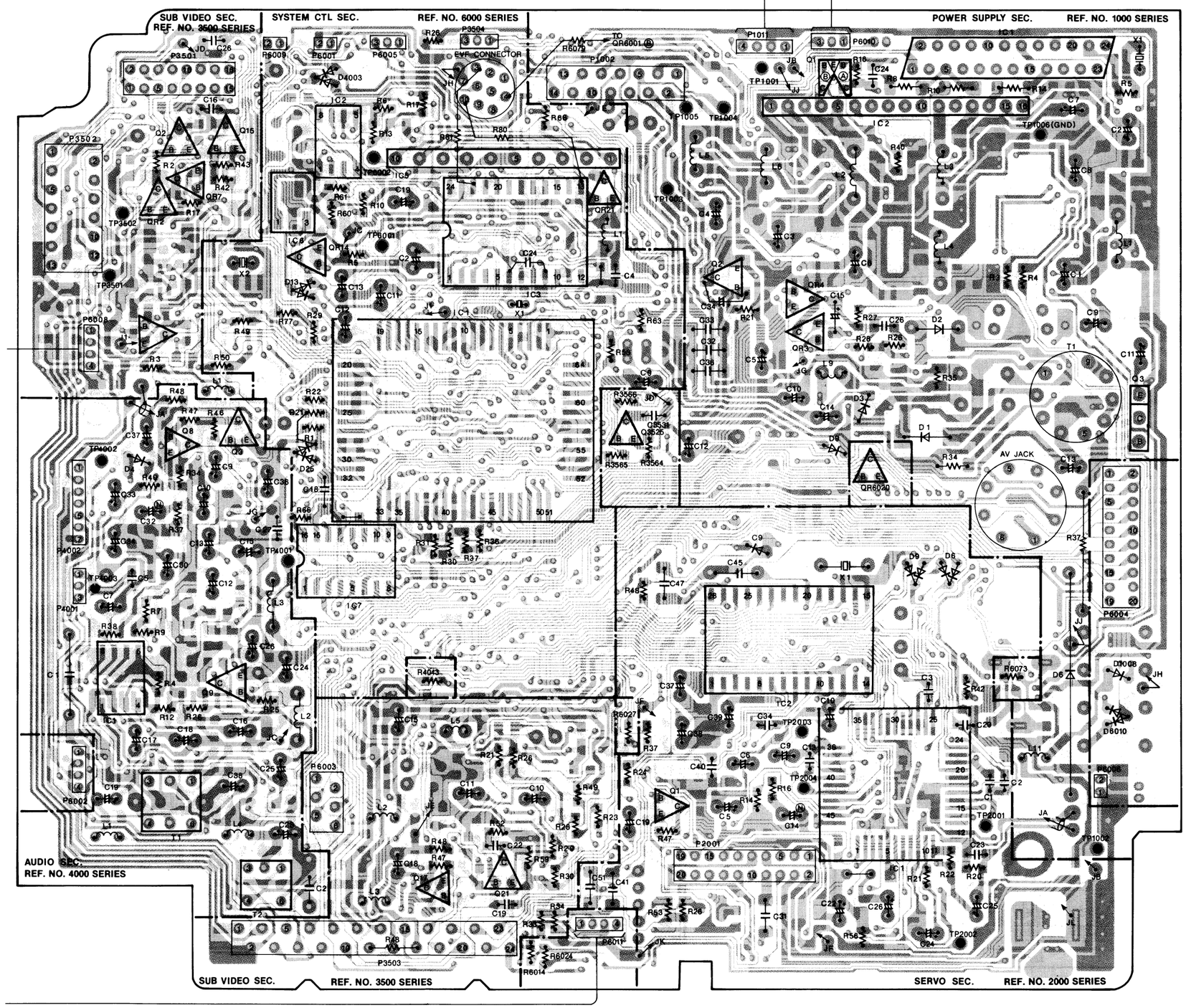

(COMPONENT SIDE)

MAIN C.B.A. (VE

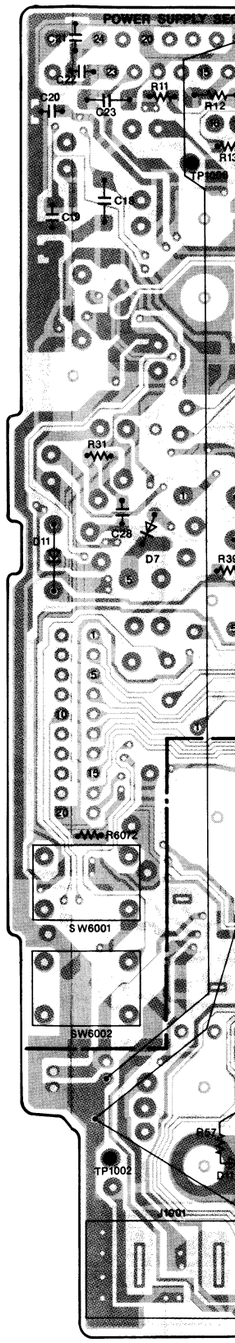

(FOIL SID

5 | 6 | 7 | 8 | 9 | 10 | 11 | 12

A)

A)

1000 SERIES

MAIN C.B.A. (VEP06487A)

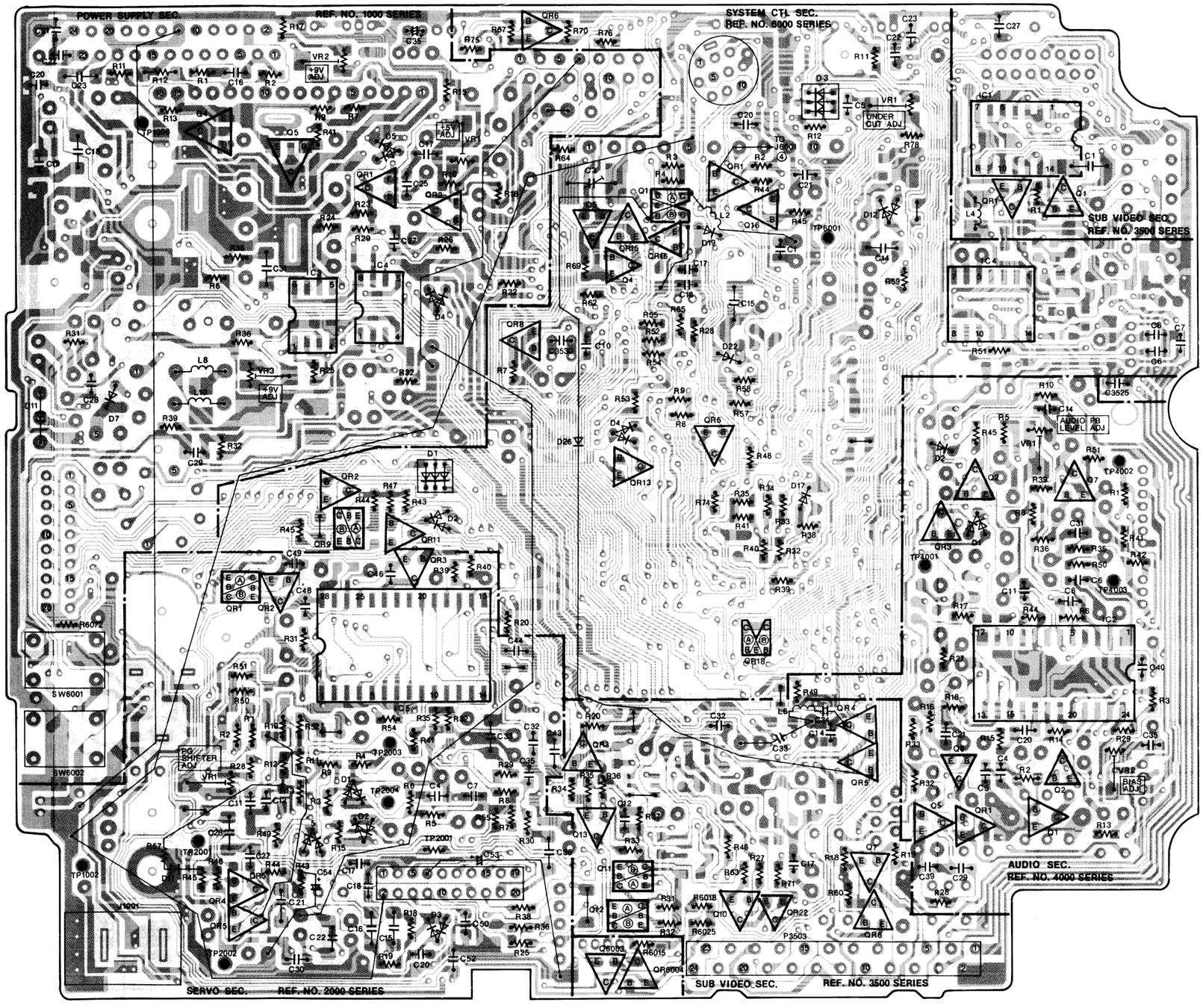

(FOIL SIDE)

POWER SUPPLY Section	
Transistor	
Q1001	F-9 Ⓒ
Q1002	E-9 Ⓒ
Q1003	D-11 Ⓒ
Transistor & Resistor	
QR1001	E-13 Ⓕ
QR1002	E-14 Ⓕ
QR1003	D-9 Ⓒ
QR1004	E-9 Ⓒ
QR1005	E-12 Ⓕ
Integrated Circuit	
IC1001	F-10 Ⓒ
IC1002	F-10 Ⓒ
IC1003	E-13 Ⓒ
IC1004	E-13 Ⓕ
Test Point	
TP1001	F-9 Ⓒ
TP1002	E-11 Ⓒ
TP1003	E-9 Ⓒ
TP1004	F-9 Ⓒ
TP1005	F-9 Ⓒ
TP1006	E-10 Ⓒ
Adjustment	
VR1001	E-14 Ⓕ
VR1002	F-13 Ⓕ
VR1003	D-13 Ⓕ
Connector	
P1002	F-8 Ⓒ
P1011	F-9 Ⓒ

ADDRESS INFORMATION
Ⓒ ··· COMPONENT SIDE
Ⓕ ··· FOIL SIDE

SERVO Section	
Transistor & Resistor	
QR2001	C-13 Ⓕ
QR2002	C-13 Ⓕ
QR2003	C-14 Ⓕ
QR2004	A-13 Ⓕ
QR2005	B-13 Ⓕ
Integrated Circuit	
IC2001	B-10 Ⓒ
IC2002	B-9 Ⓒ
IC2005	C-14 Ⓕ
Test Point	
TP2001	B-10 Ⓒ
TP2001	B-13 Ⓕ
TP2002	B-10 Ⓒ
TP2002	A-13 Ⓕ
TP2003	B-9 Ⓒ
TP2003	B-13 Ⓕ
TP2004	B-13 Ⓕ
TP2004	B-9 Ⓒ
Adjustment	
VR2001	B-13 Ⓕ
Connector	
P2001	B-9 Ⓒ
P2001	B-14 Ⓕ

ADDRESS INFORMATION
Ⓒ ··· COMPONENT SIDE
Ⓕ ··· FOIL SIDE

AUDIO Section	
Transistor	
Q4001	B-17 Ⓕ
Q4002	D-17 Ⓕ
Q4003	D-6 Ⓒ
Q4007	D-17 Ⓕ
Q4009	C-6 Ⓒ
Transistor & Resistor	
QR4001	B-16 Ⓕ
QR4003	C-16 Ⓕ
QR4005	B-16 Ⓕ
Integrated Circuit	
IC4001	B-6 Ⓒ
IC4002	B-17 Ⓕ
Test Point	
TP4001	C-7 Ⓒ
TP4001	C-16 Ⓕ
TP4002	D-6 Ⓒ
TP4002	D-17 Ⓕ
TP4003	C-6 Ⓒ
TP4003	C-17 Ⓕ
Adjustment	
VR4001	D-17 Ⓕ
VR4002	B-17 Ⓕ
Connector	
P4001	C-5 Ⓒ
P4002	C-5 Ⓒ

ADDRESS INFORMATION
Ⓒ ··· COMPONENT SIDE
Ⓕ ··· FOIL SIDE

SUB VIDEO Section	
Transistor	
Q3501	E-17 Ⓕ
Q3502	E-6 Ⓒ
Q3507	B-16 Ⓕ
Q3510	A-15 Ⓕ
Q3511	B-15 Ⓕ
Q3512	A-15 Ⓕ
Q3513	B-14 Ⓕ
Q3515	E-6 Ⓒ
Transistor & Resistor	
QR3501	E-17 Ⓕ
QR3502	E-6 Ⓒ
QR3503	B-14 Ⓕ
QR3504	B-16 Ⓕ
QR3505	B-16 Ⓕ
QR3506	A-16 Ⓕ
QR3507	E-6 Ⓒ
QR3517	A-7 Ⓒ
QR3521	A-8 Ⓒ
Integrated Circuit	
IC3501	E-17 Ⓕ
Test Point	
TP3501	E-6 Ⓒ
TP3501	E-17 Ⓕ
Connector	
P3501	F-6 Ⓒ
P3502	E-6 Ⓒ
P3503	A-7 Ⓒ
P3504	F-8 Ⓒ

ADDRESS INFORMATION
Ⓒ ··· COMPONENT SIDE
Ⓕ ··· FOIL SIDE

3-26. MAIN (SYSTEM CONTROL/POWER SUPPLY/AUDIO/SUB VIDEO/SERVO) C.B.A. (VEP06487A)

SYSTEM CONTROL Section	
Transistor	
Q6003	A-15 Ⓕ
Q6005	E-14 Ⓕ
Q6016	E-15 Ⓕ
Transistor & Resistor	
QR6001	E-15 Ⓕ
QR6002	D-13 Ⓕ
QR6004	A-15 Ⓕ
QR6005	D-15 Ⓕ
QR6006	F-15 Ⓕ
QR6008	D-14 Ⓕ
QR6009	C-13 Ⓕ
QR6011	C-13 Ⓕ
QR6013	D-15 Ⓕ
QR6014	E-7 Ⓒ
QR6015	E-15 Ⓕ
QR6018	C-15 Ⓕ
Integrated Circuit	
IC6001	D-8 Ⓒ
IC6002	F-7 Ⓒ
IC6003	E-8 Ⓒ
IC6004	E-16 Ⓕ
IC6005	E-7 Ⓒ
IC6006	E-7 Ⓒ
IC6007	C-7 Ⓒ
Test Point	
TP6001	E-7 Ⓒ
TP6001	E-16 Ⓕ
Connector	
P6001	F-7 Ⓒ
P6002	B-5 Ⓒ
P6003	B-7 Ⓒ
P6004	C-11 Ⓒ
P6005	F-7 Ⓒ
P6006	B-11 Ⓒ
P6008	D-6 Ⓒ
P6009	F-7 Ⓒ
P6011	A-8 Ⓒ

ADDRESS INFORMATION
Ⓒ ··· COMPONENT SIDE
Ⓕ ··· FOIL SIDE

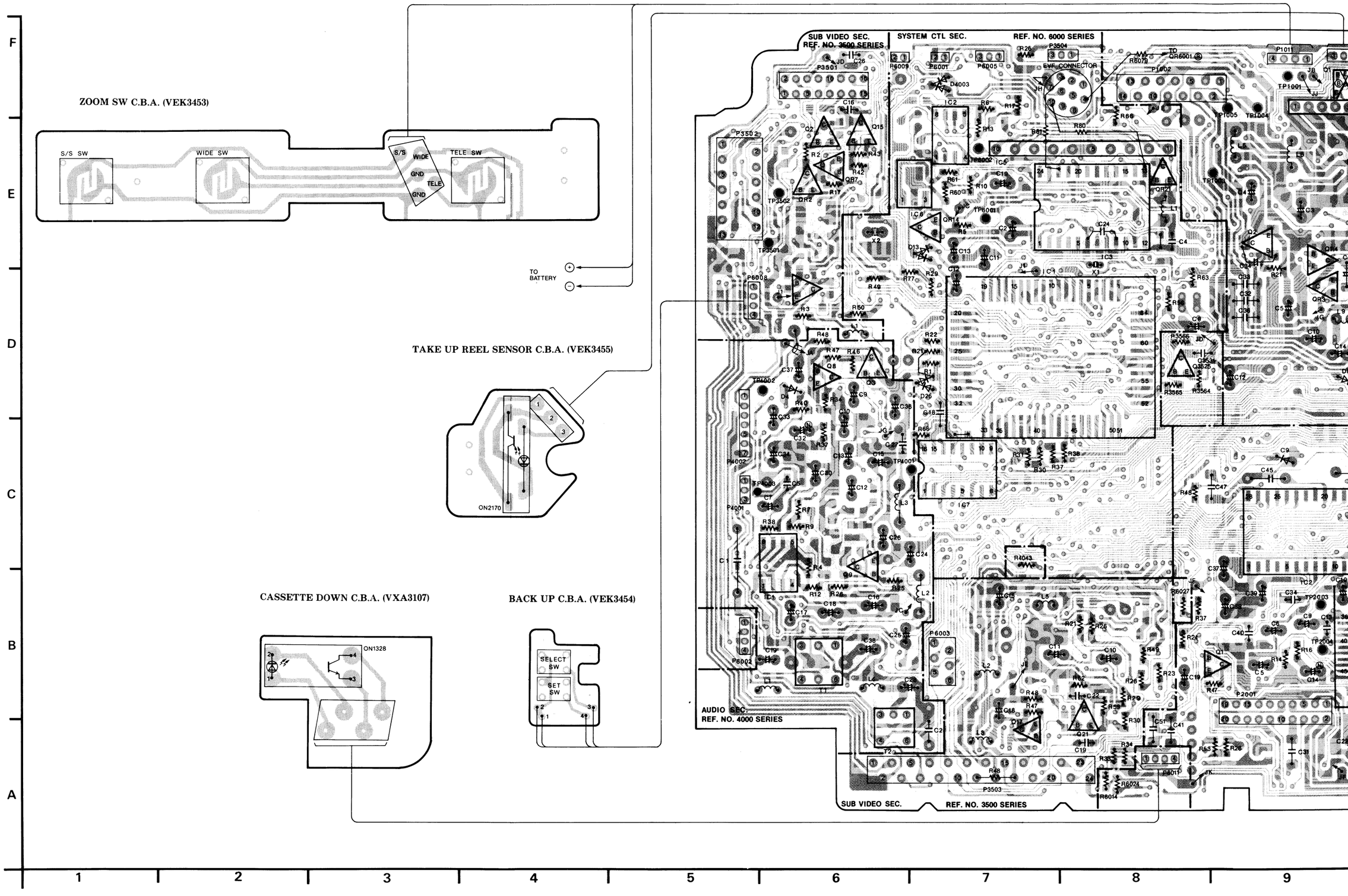

Back Page:
MAIN Section

MAIN C.B.A. (VEP06487A)

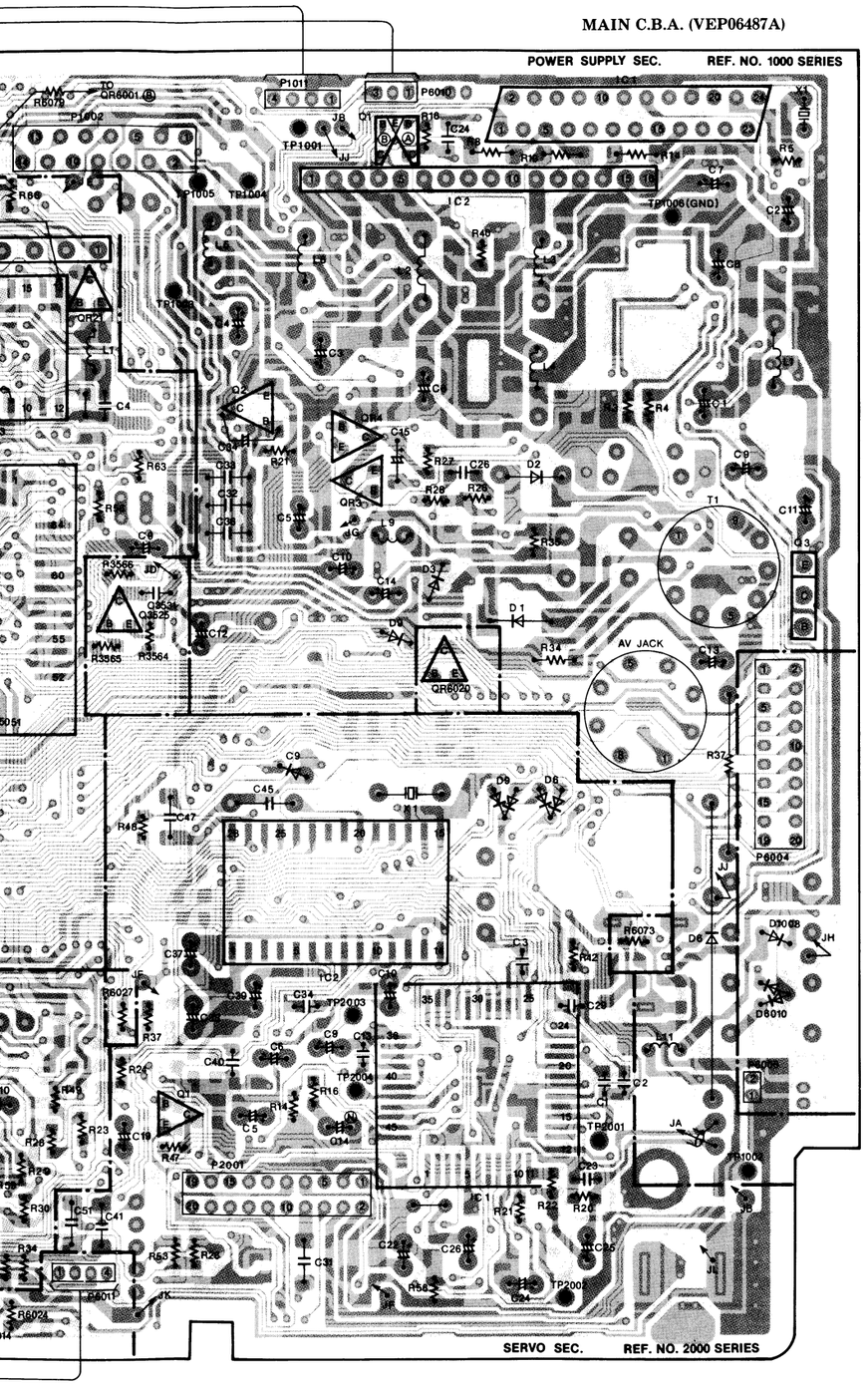

(COMPONENT SIDE)

MAIN C.B.A. (VEP06487A)

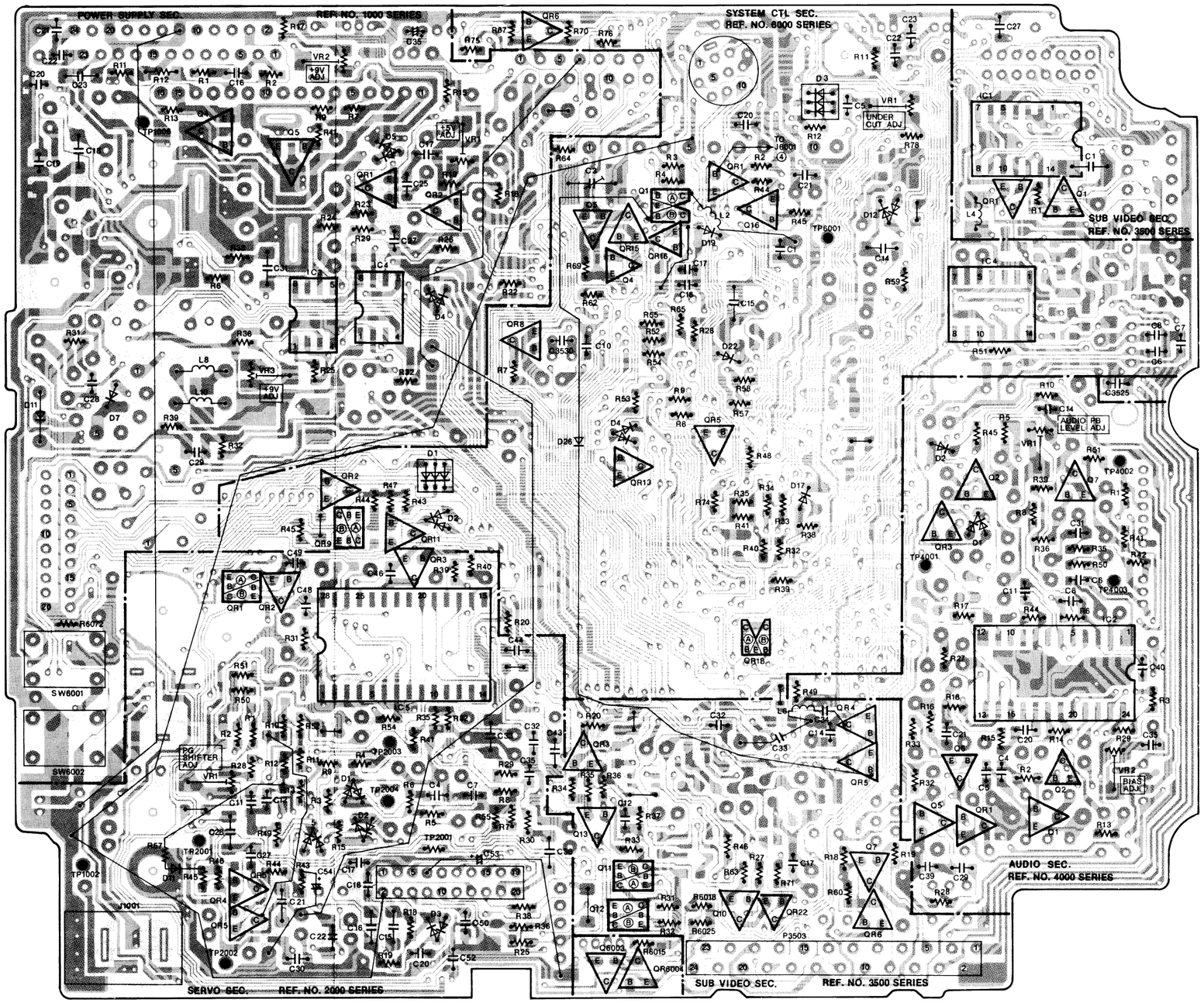

(FOIL SIDE)

3-27. SYSTEM CONTROL SCHEMATIC DIAGRAM

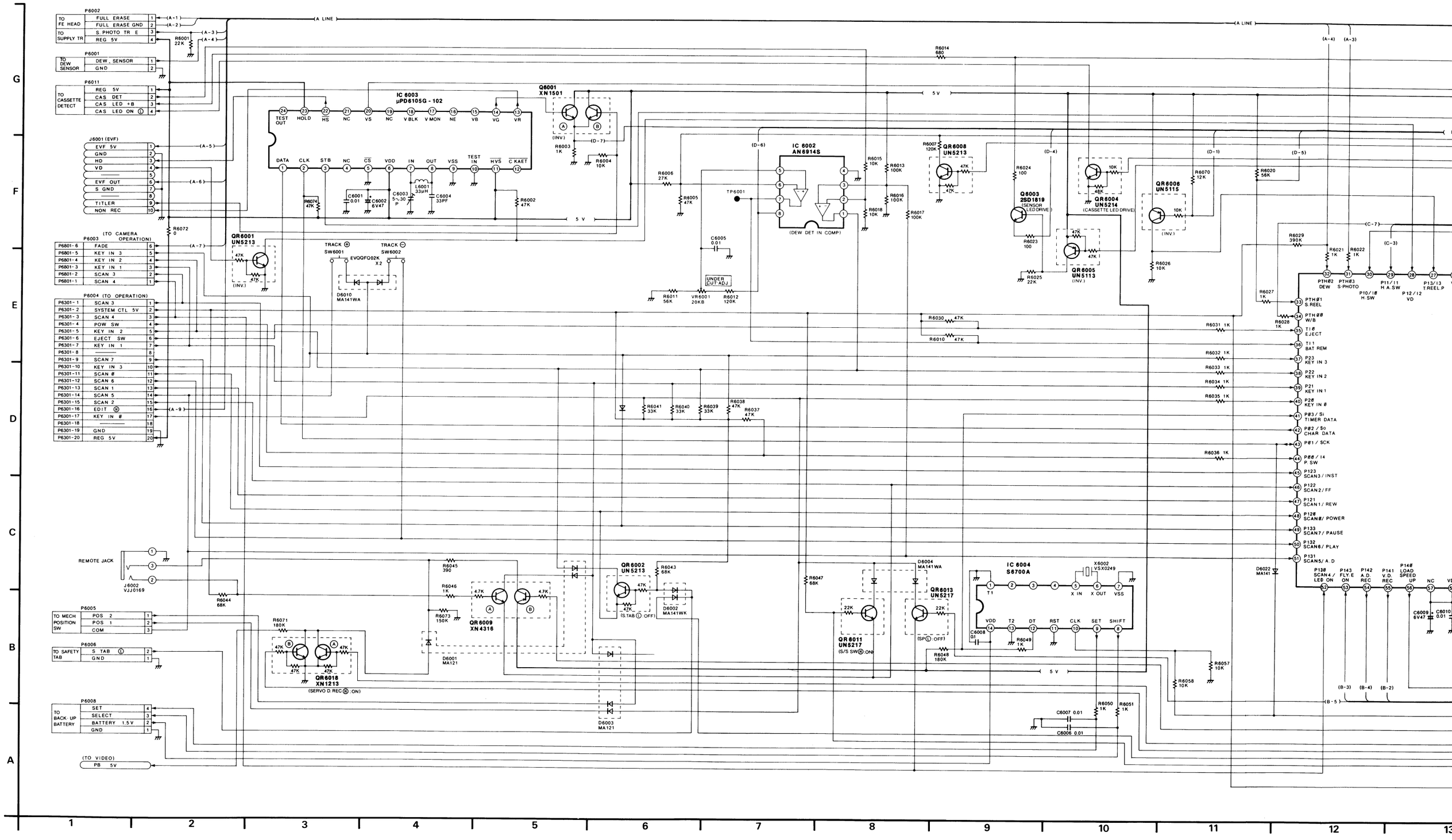

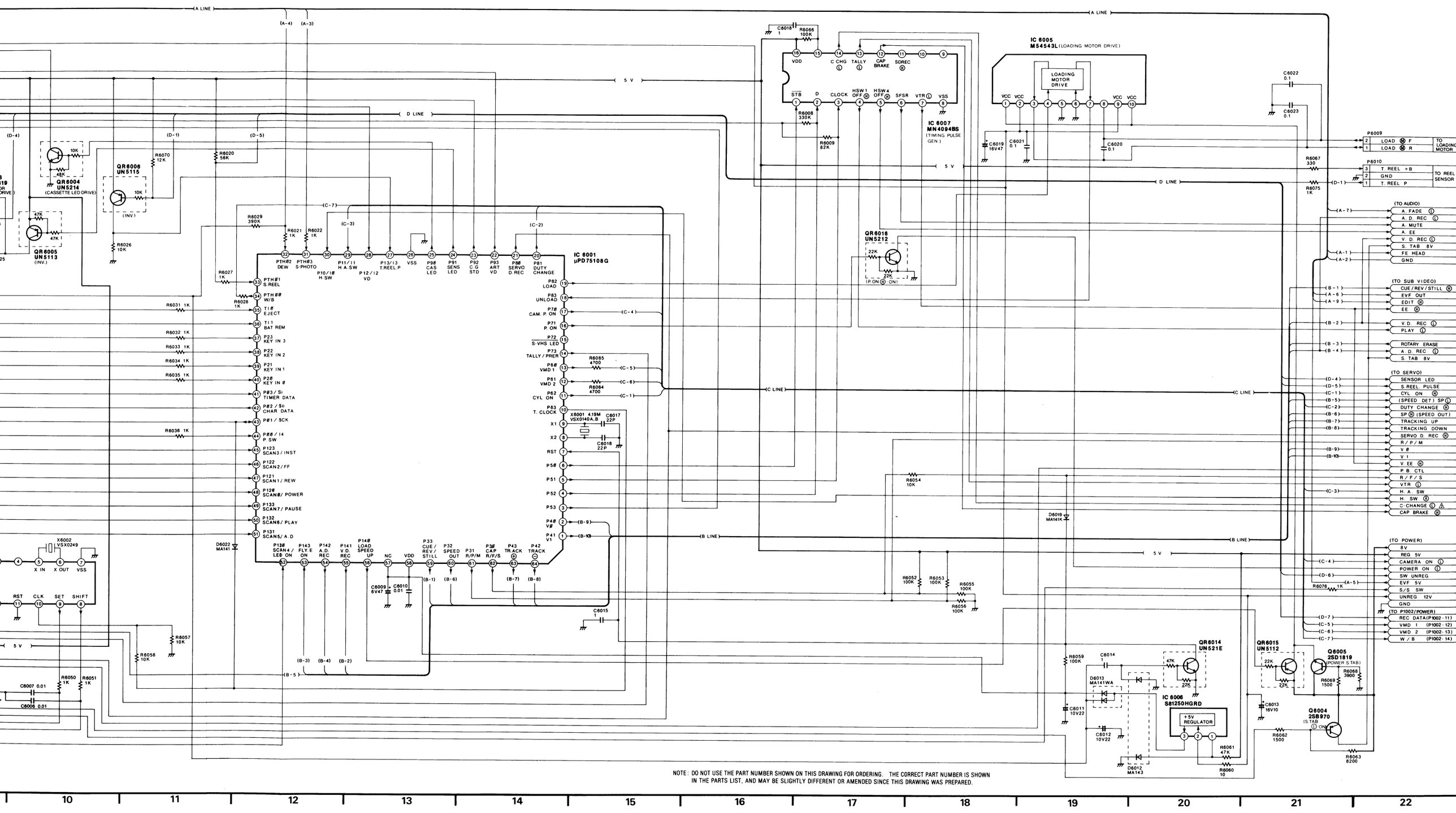

NOTE: DO NOT USE THE PART NUMBER SHOWN ON THIS DRAWING FOR ORDERING. THE CORRECT PART NUMBER IS SHOWN IN THE PARTS LIST, AND MAY BE SLIGHTLY DIFFERENT OR AMENDED SINCE THIS DRAWING WAS PREPARED.

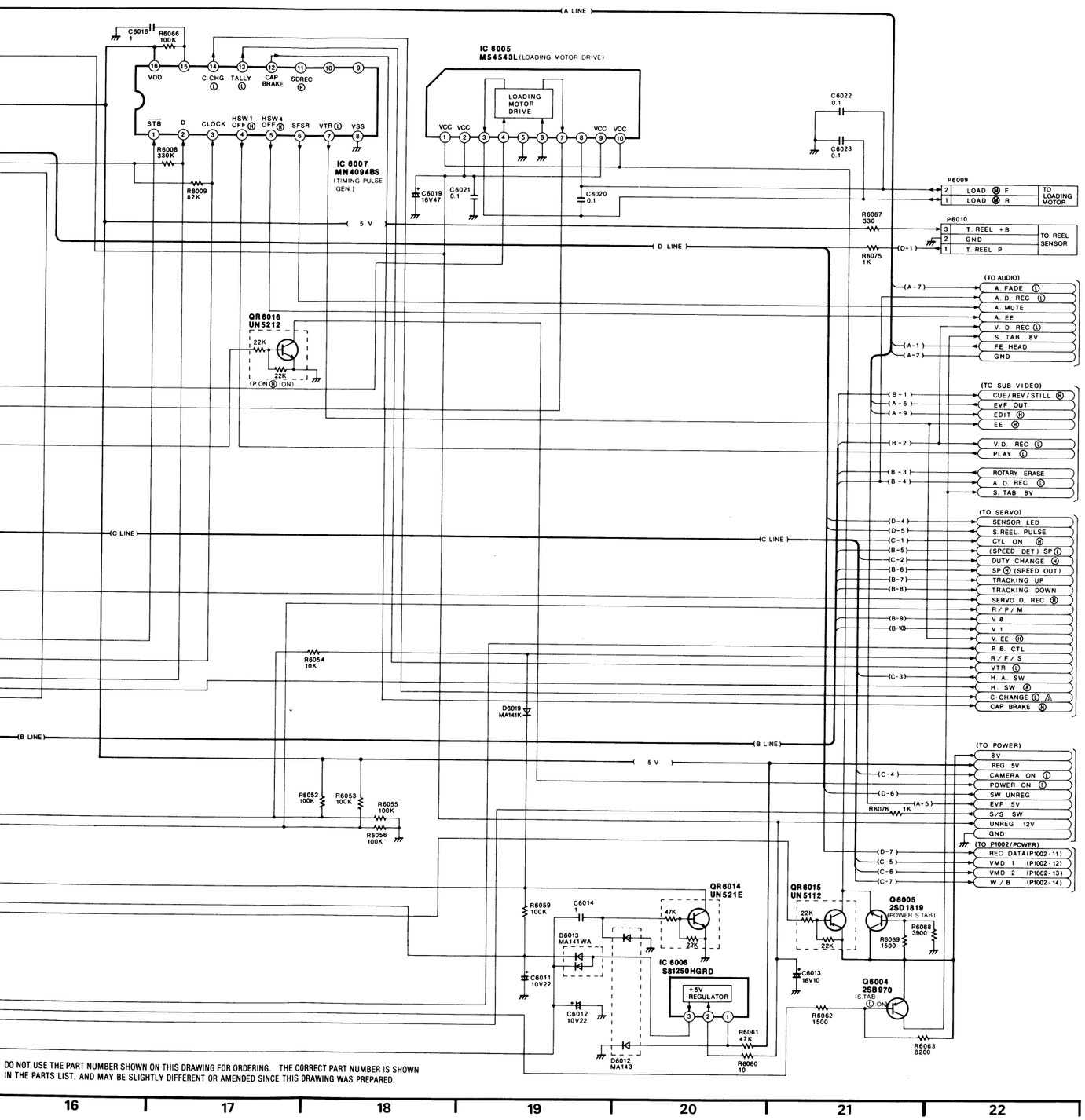

SYSTEM CONTROL Section ICs VOLTAGE CHART (SP MODE)

REF. NO.	IC6001																			
MODE	1	2	3	4	5	6	7	8	9	10	11	12	13	14	15	16	17	18	19	20
STOP	0	4.9	4.9	4.9	4.9	0	4.9	2.6	—	4.8	0	0	0	4.9	4.9	4.9	0.1	0	0	0
PLAY	0	4.9	4.9	4.9	4.9	0	4.9	2.6	0	4.8	0	0	0	4.9	0	4.9	4.9	0	0	0
REC	0.2	4.9	4.9	4.9	4.9	0.2	4.9	2.6	—	4.8	4.9	0.2	0.2	0	4.9	4.9	0.3	0.1	0.1	0.1

REF. NO.	IC6001																			
MODE	21	22	23	24	25	26	27	28	29	30	31	32	33	34	35	36	37	38	39	40
STOP	0	4.9	0	4.9	3.9	0	0	0.3	2.4	1.8	0	0	4.7	0.1	4.8	4.8	4.8	4.8	4.5	0.7
PLAY	0	0	0	4.9	0	0	—	0.3	0	1.8	0	0	2.4	0	4.8	4.8	4.8	4.8	1.0	4.4
REC	4.9	4.9	0.1	4.9	0	0	2.4	0.3	2.4	1.8	0	0	2.4	0.1	4.8	4.8	4.8	4.8	1.1	4.4

REF. NO.	IC6001																			
MODE	41	42	43	44	45	46	47	48	49	50	51	52	53	54	55	56	57	58	59	60
STOP	4.4	2.5	4.6	4.8	5.5	5.6	4.9	0.3	5.3	5.0	4.1	0.3	8.8	7.8	8.8	8.8	4.9	0	0	0
PLAY	4.4	2.5	4.6	4.8	4.5	4.3	3.3	0.3	4.5	0.4	4.1	0.3	8.8	7.8	8.8	8.8	4.9	4.9	0	4.9
REC	4.4	2.5	4.6	4.8	3.8	4.7	3.8	0	4.8	0.5	4.1	0.4	0	0	0.2	0	0	0	0	0

REF. NO.	IC6001										IC6002									
MODE	61	62	63	64							1	2	3	4	5	6	7	8		
STOP	2.5	0	0	0							4.8	0	3.0	0	3.5	3.1	4.8	4.8		
PLAY	2.5	2.4	0	0							4.8	0	3.0	0	3.5	3.1	4.8	9.7		
REC	0	0	0.2	0							4.8	0	3.0	0	0	3.1	4.8	9.7		

REF. NO.	IC6003																			
MODE	1	2	3	4	5	6	7	8	9	10	11	12	13	14	15	16	17	18	19	20
STOP	2.5	4.6	0.7	0	0	5.0	2.9	2.9	0	0	0	2.1	0	0	0	0	0	0	0	4.9
PLAY	2.5	4.6	0	0	0	4.9	2.9	2.9	0	0	0	2.3	0	0	0	0	0	0	0	4.9
REC	2.5	4.6	0.1	0	0	4.9	2.9	2.9	0	0	0	2.1	0	0	0	0	0	0	0	4.9

REF. NO.	IC6003																			
MODE	21	22	23	24																
STOP	0	4.1	4.9	1.1																
PLAY	0	4.1	4.9	1.1																
REC	0	4.1	4.9	0.4																

REF. NO.	IC6004																			
MODE	1	2	3	4	5	6	7	8	9	10	11	12	13	14						
STOP	0	1.3	0	0	0.7	0.7	0	1.5	1.5	2.4	0	4.5	0	1.5						
PLAY	0	1.4	0	0	0.7	0.7	0	1.5	1.5	2.4	0	4.5	0	1.5						
REC	0	1.5	0	0	0.7	0.7	0	1.5	1.5	2.4	0	4.5	0	1.5						

REF. NO.	IC6005																			
MODE	1	2	3	4	5	6	7	8	9	10										
STOP	8.1	9.9	0	0	0	0	0	0	9.9	8.1										
PLAY	7.9	9.9	0	0	0	0	0	0	9.9	7.9										
REC	7.9	9.9	0.1	0.1	0	0	0.1	0	9.9	7.9										

REF. NO.	IC6006																			
MODE	1	2	3																	
STOP	0.5	9.7	5.6																	
PLAY	0.5	9.7	5.6																	
REC	0.5	9.7	5.6																	

REF. NO.	IC6007																			
MODE	1	2	3	4	5	6	7	8	9	10	11	12	13	14	15	16				
STOP	0	4.9	4.9	4.9	4.9	0	4.8	0	0	4.4	0	0	4.9	0	4.9	4.9				
PLAY	0	4.9	4.9	0.2	0	0	0	0	0	4.4	0	0	4.9	4.9	0	4.9				
REC	0.2	4.9	4.9	4.9	4.9	0	4.8	0	0	4.4	0	0	0	4.9	4.9	4.9				

SYSTEM CONTROL Section TRs VOLTAGE CHART (SP MODE)

REF. NO.	Q6001 Ⓐ			Q6001 Ⓑ			Q6003			Q6004			Q6005					
MODE	E	C	B	E	C	B	E	C	B	E	C	B	E	C	B			
STOP	2.1	5.0	0	2.1	5.0	0	0.1	2.7	0	8.8	8.8	8.2	8.8	8.1	8.8			
PLAY	0	4.9	0	0	4.9	0	0.1	2.4	0	8.8	8.8	8.1	8.0	8.8	8.7			
REC	2.1	5.0	0	2.1	5.0	0	0.1	2.7	0	8.7	8.6	8.0	8.0	8.7	8.6			

REF. NO.	QR6001			QR6002			QR6004			QR6005			QR6006			QR6008		
MODE	E	C	B	E	C	B	E	C	B	E	C	B	E	C	B	E	C	B
STOP	0	0.3	3.9	0.3	5.5	0.4	0	9.7	0	5.0	0	4.9	5.0	4.9	3.9	0	0	4.9
PLAY	0	0.3	3.8	0.3	5.4	0.4	0	9.7	0	4.9	0	4.9	4.9	2.3	4.4	0	0	4.9
REC	0	0.3	3.8	0.4	5.7	0.4	0	9.7	0	5.0	0	4.9	5.0	2.3	4.0	0	0	4.9

REF. NO.	QR6009 Ⓐ			QR6009 Ⓑ			QR6011			QR6012			QR6013			QR6014		
MODE	E	C	B	E	C	B	E	C	B	E	C	B	E	C	B	E	C	B
STOP	5.0	0	4.9	5.2	0	4.8	5.4	5.4	4.8	4.7	5.5	−0.1	0.3	5.6	0	0	4.9	0
PLAY	4.9	0.8	4.9	4.9	4.9	4.8	5.1	5.2	4.8	0.4	4.3	−1.3	0.3	5.2	0.1	0	4.9	0
REC	4.9	4.9	4.0	5.3	5.3	4.8	5.3	5.4	4.8	0.5	5.8	−2.8	0.4	5.0	0	0	4.9	0

REF. NO.	QR6015			QR6016			QR6018 Ⓐ			QR6018 Ⓑ		
MODE	E	C	B	E	C	B	E	C	B	E	C	B
STOP	0	8.1	8.8	0	0	4.9	0	0	0	0	0	4.9
PLAY	8.8	8.0	8.7	0	0	4.9	0	1.0	0	0	1.0	2.9
REC	8.7	8.0	8.7	0	0	4.9	0	0	4.9	0	0	2.9

Next Page:
DRIVE Section

3-28. DRIVE SCHEMATIC DIAGRAM

3-29. DRIVE C.B.A. (VEP022

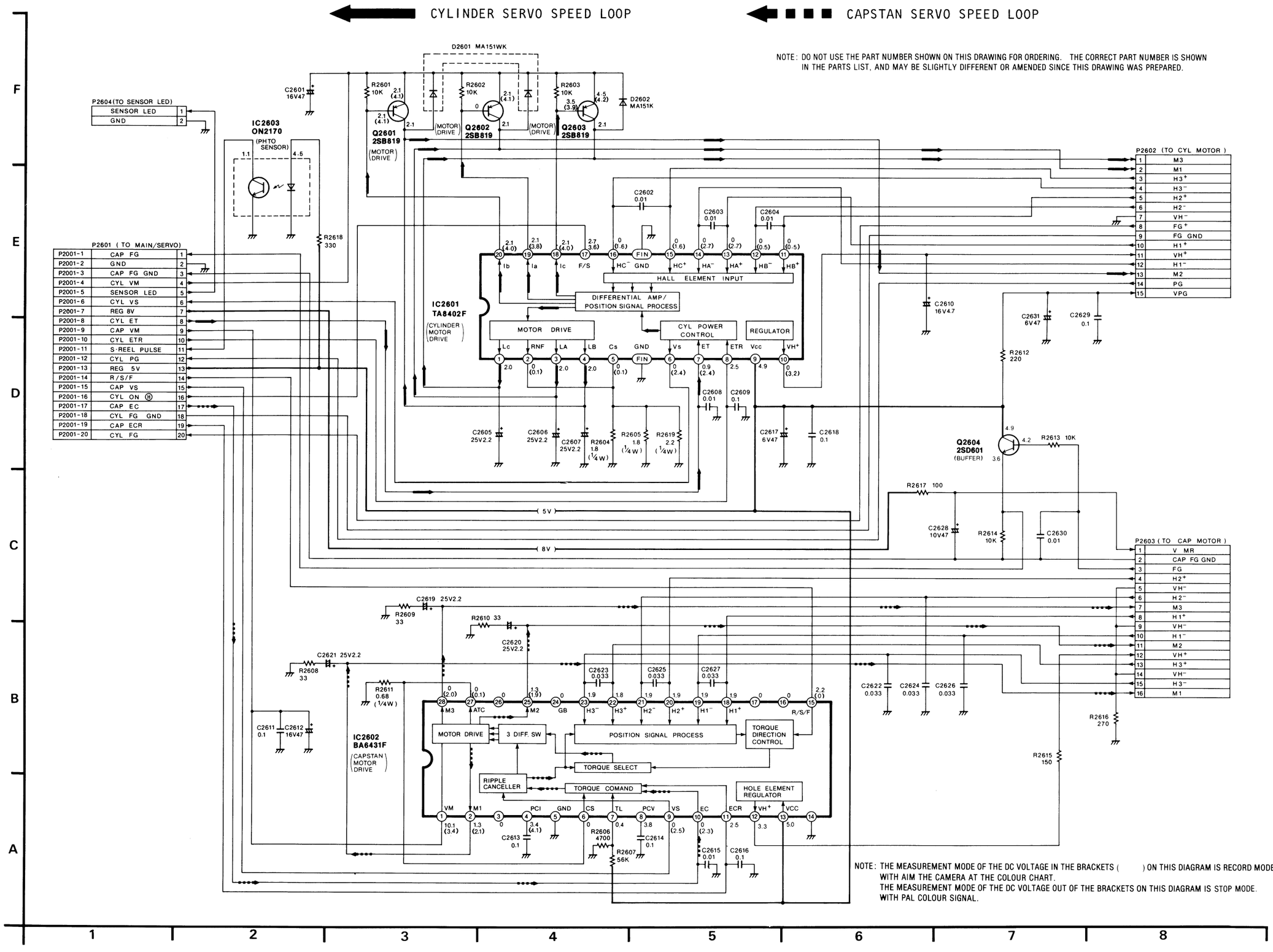

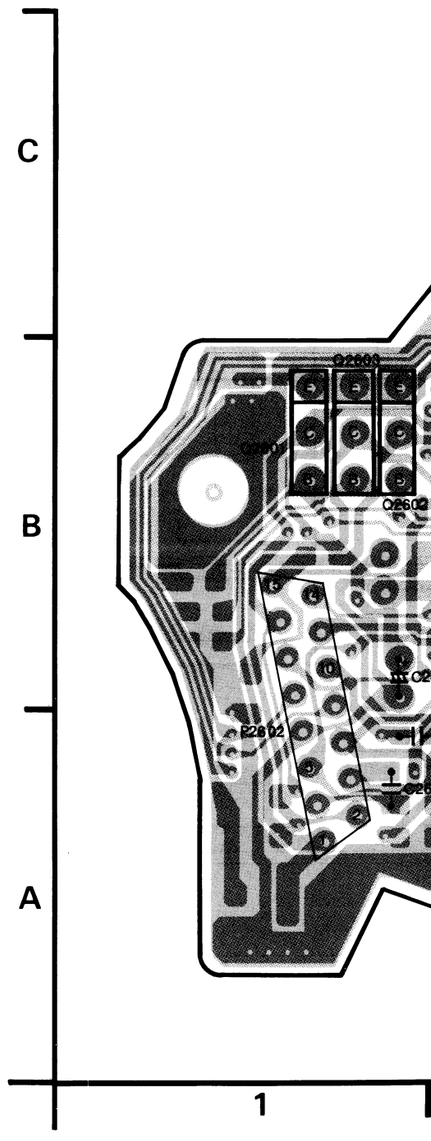

3-29. DRIVE C.B.A. (VEP02297A)

3-30. CIRC

DRIVE C.B.A.	
Transistor	
Q2601	B-1 Ⓒ
Q2602	B-1 Ⓒ
Q2603	B-1 Ⓒ
Q2604	A-5 Ⓕ
Integrated Circuit	
IC2601	B-5 Ⓕ
IC2602	B-2 Ⓒ
IC2603	A-3 Ⓒ
Connector	
P2601	B-2 Ⓒ
P2602	A-1 Ⓒ
P2603	A-2 Ⓒ
P2604	B-3 Ⓒ

ADDRESS INFORMATION
Ⓒ ··· COMPONENT SIDE
Ⓕ ··· FOIL SIDE

SENSOR LED C.B.A. (VEP00K17A)

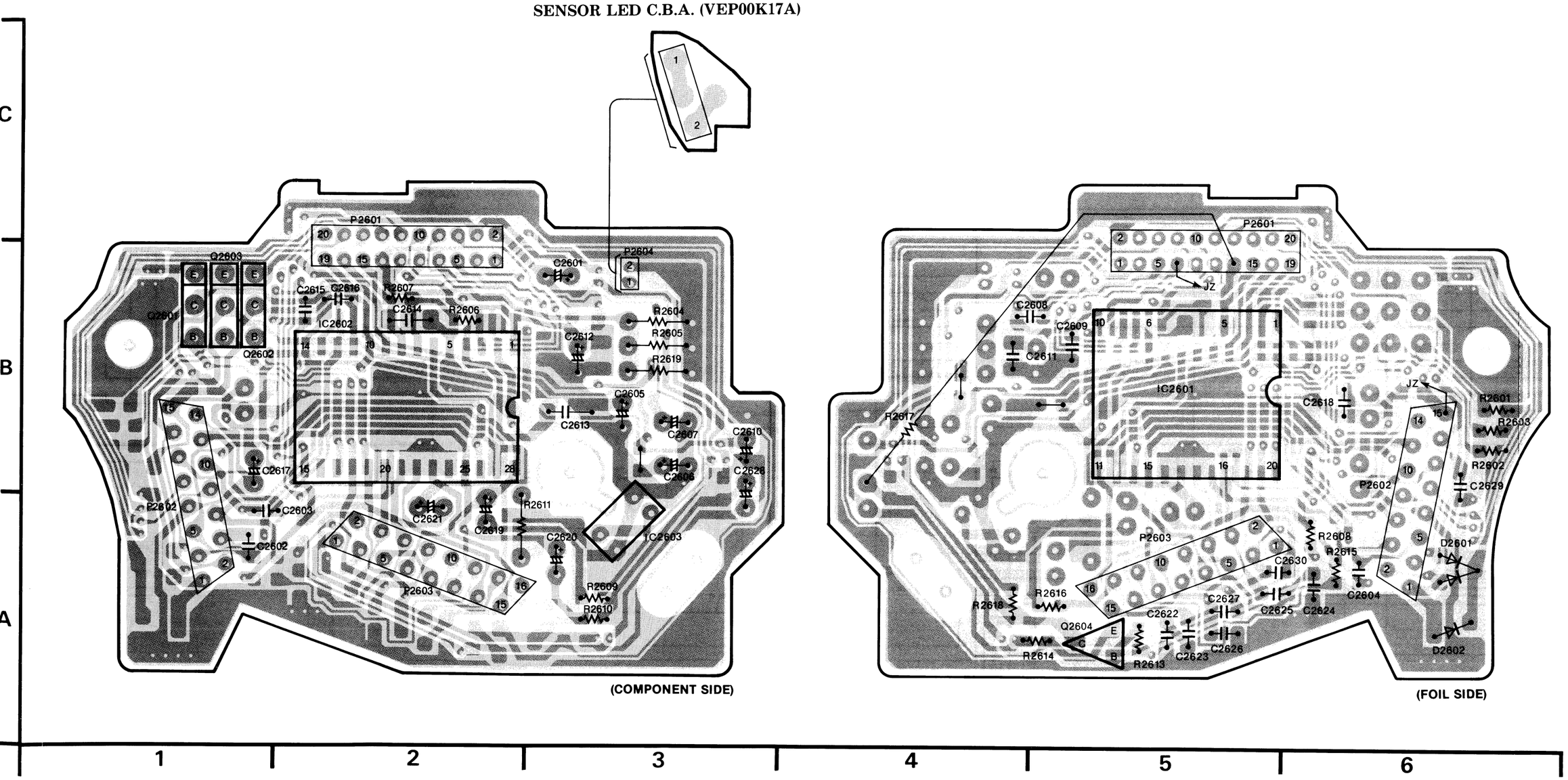

PRO
C.B.

DRIVE C.B.A.		
Transistor		
Q2601	B-1	Ⓒ
Q2602	B-1	Ⓒ
Q2603	B-1	Ⓒ
Q2604	A-5	Ⓕ
Integrated Circuit		
IC2601	B-5	Ⓕ
IC2602	B-2	Ⓒ
IC2603	A-3	Ⓒ
Connector		
P2601	B-2	Ⓒ
P2602	A-1	Ⓒ
P2603	A-2	Ⓒ
P2604	B-3	Ⓒ

ADDRESS INFORMATION
Ⓒ ··· COMPONENT SIDE
Ⓕ ··· FOIL SIDE

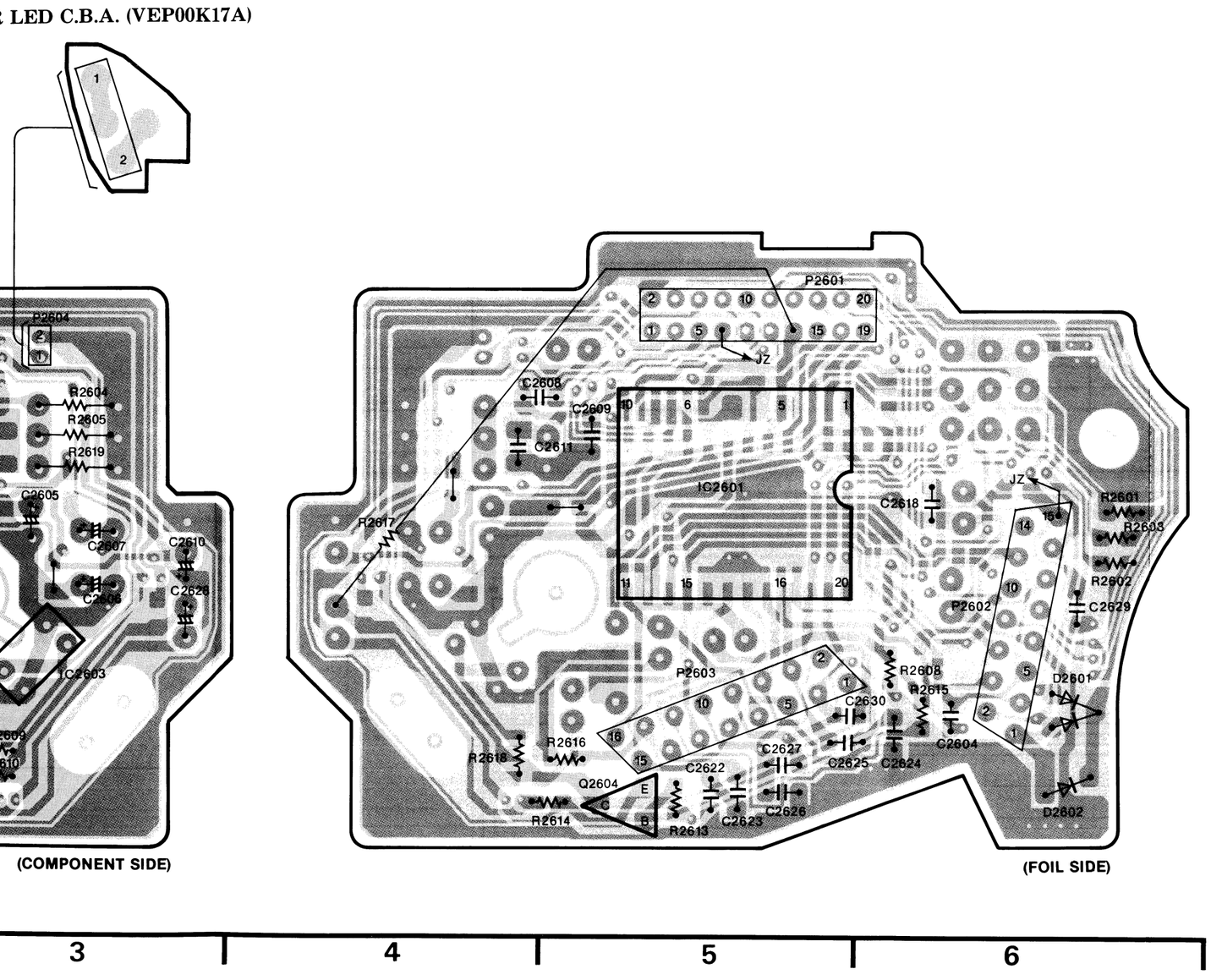

3-30. CIRCUIT BOARD LAYOUT

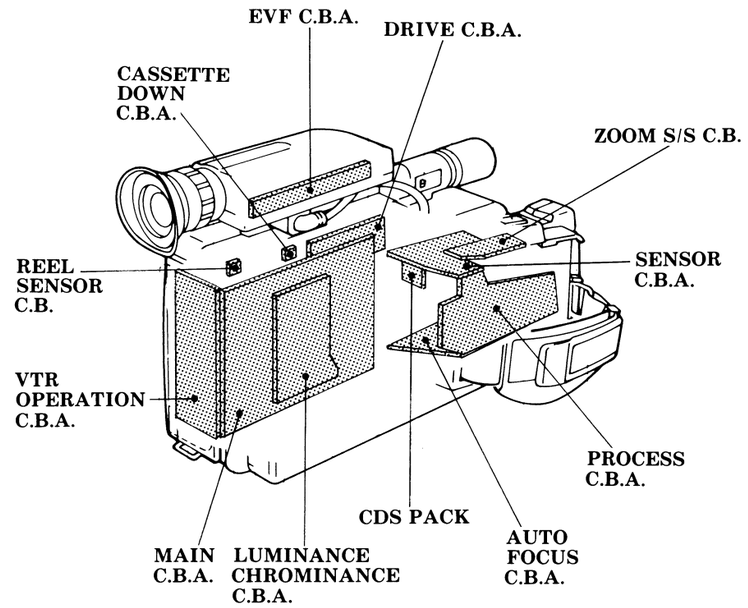

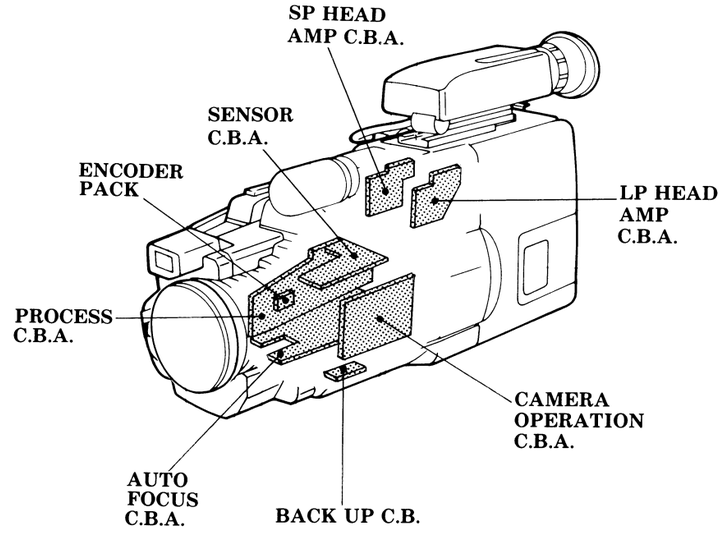

3-31. VTR INTERCONNECTION SCHEMATIC DIAGRAM

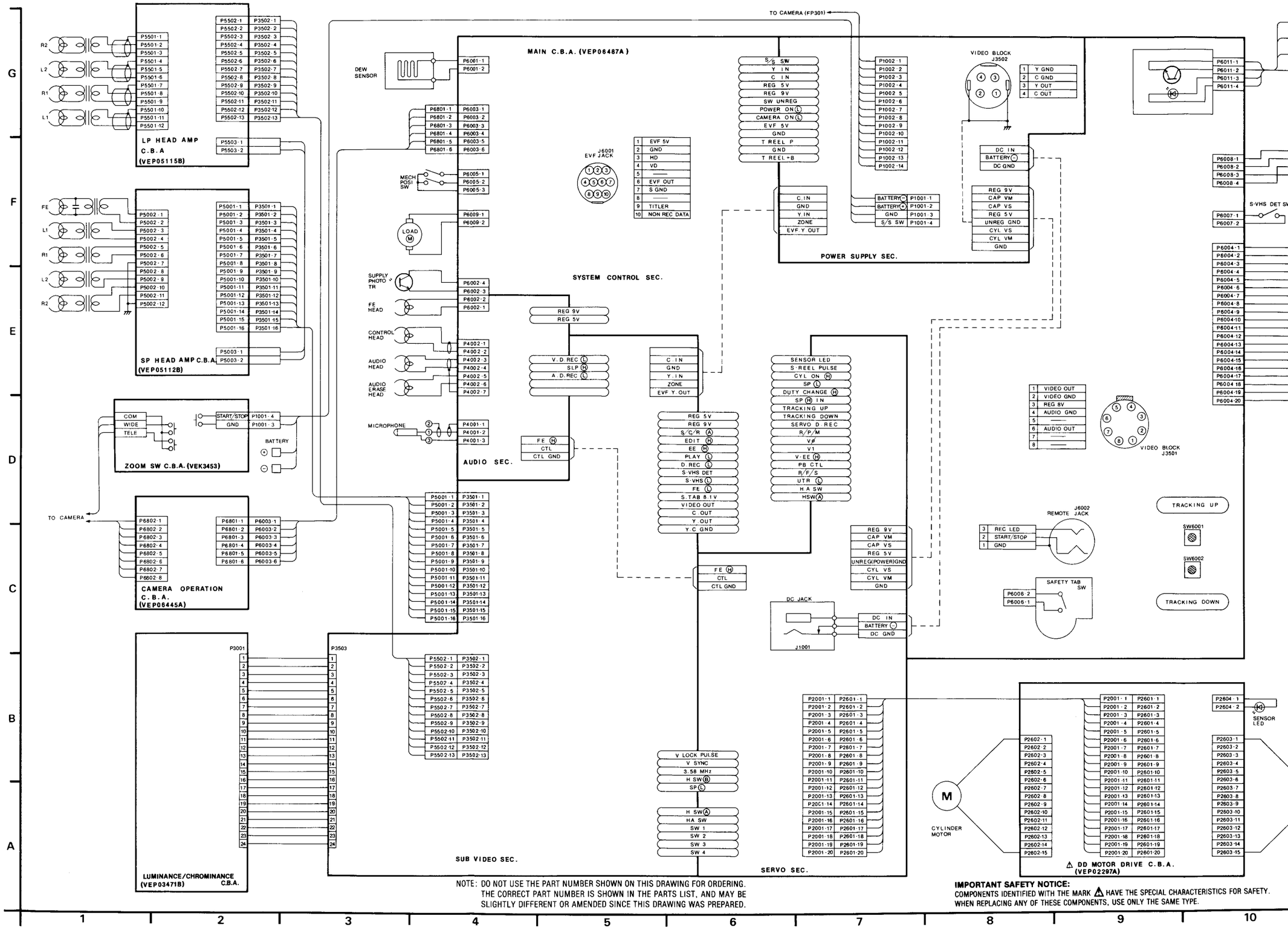

NOTE: DO NOT USE THE PART NUMBER SHOWN ON THIS DRAWING FOR ORDERING. THE CORRECT PART NUMBER IS SHOWN IN THE PARTS LIST, AND MAY BE SLIGHTLY DIFFERENT OR AMENDED SINCE THIS DRAWING WAS PREPARED.

IMPORTANT SAFETY NOTICE:
COMPONENTS IDENTIFIED WITH THE MARK ⚠ HAVE THE SPECIAL CHARACTERISTICS FOR SAFETY. WHEN REPLACING ANY OF THESE COMPONENTS, USE ONLY THE SAME TYPE.

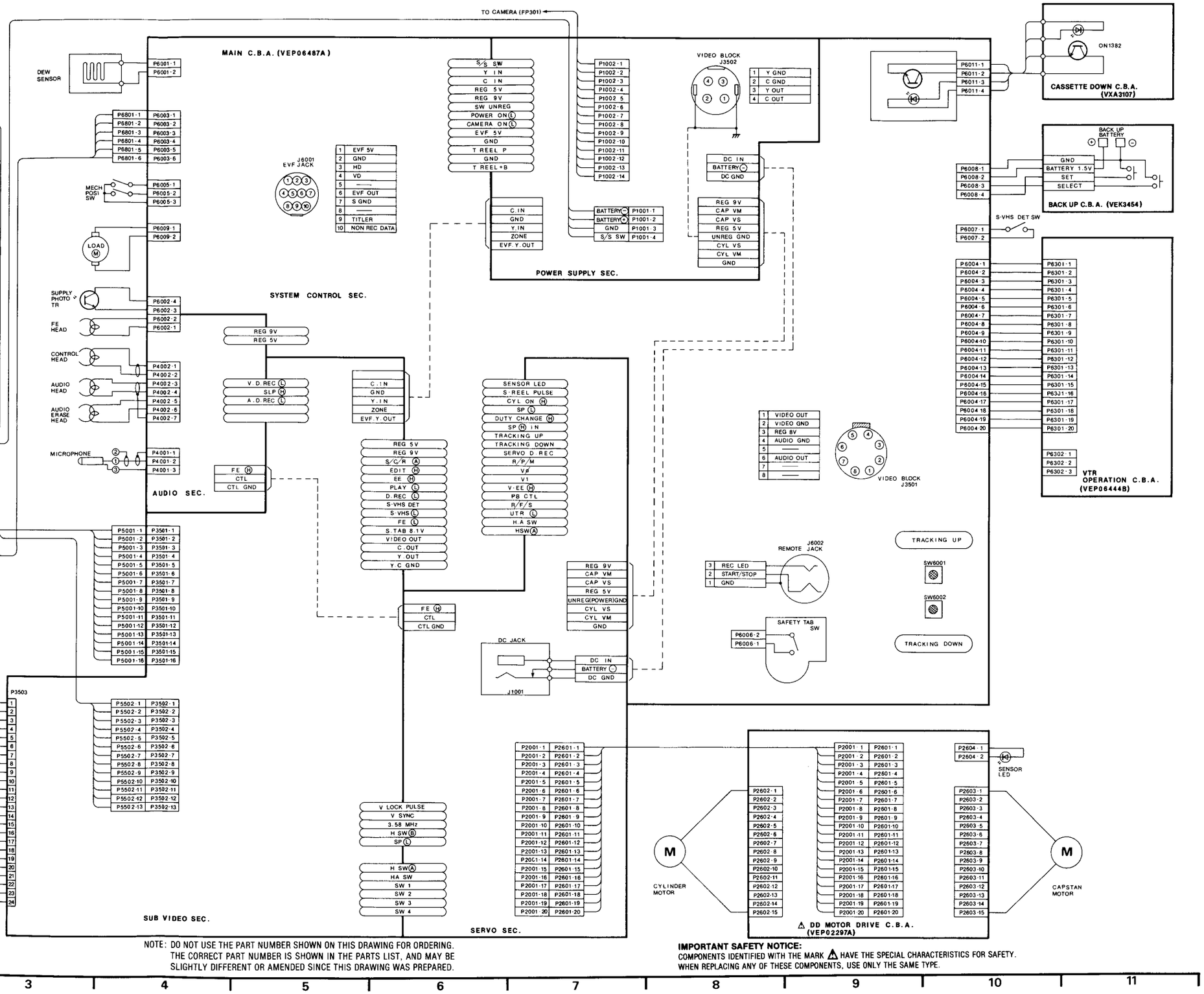

NOTE: DO NOT USE THE PART NUMBER SHOWN ON THIS DRAWING FOR ORDERING. THE CORRECT PART NUMBER IS SHOWN IN THE PARTS LIST, AND MAY BE SLIGHTLY DIFFERENT OR AMENDED SINCE THIS DRAWING WAS PREPARED.

IMPORTANT SAFETY NOTICE:
COMPONENTS IDENTIFIED WITH THE MARK ⚠ HAVE THE SPECIAL CHARACTERISTICS FOR SAFETY. WHEN REPLACING ANY OF THESE COMPONENTS, USE ONLY THE SAME TYPE.

3 4 5 6 7 8 9 10 11

Next Page:
ICs & TRs INFORMATION Section

3-32. ICs & TRs INFORMATION

GENERAL CIRCUIT PARTS

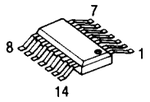

AN1324NS
S6700A
µPD4066BG

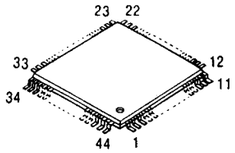

µPD9313GB
MN67461VDJF

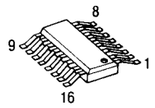

AN2010S
MN4052BS
MN4094BS

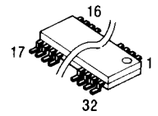

AN2583S
AN2153S
µPD6105G102

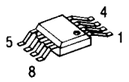

AN1358S
µPC358G2
µPC1513G
AN6914S
AN6562S
NJM3415M
MST001MS
MSM6989MS
MJM4558MP

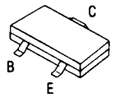

2SA812 2SC3138
2SA1022 2SC3930
2SA1255 2SC3931
2SA1532 2SC4176
2SA1610 2SD968A
2SB709 2SD1256
2SB710 2SD1328
2SB956 2SD1819
2SB970 2SD1819R
2SB1218 2SD1820
2SB1219 2SD1820R
2SB1220 2SD1823

2SA1175

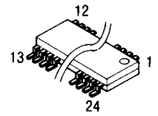

AN2510S
µPC2300G

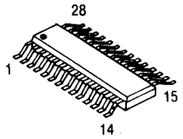

AN3798S
MN1551VYJS
AN3215S

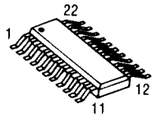

AN6367S
AN3592S
AN3311S

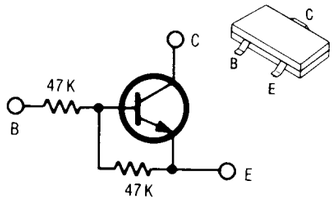

UN5213

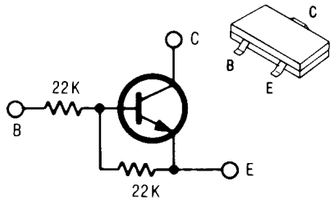

UN5212

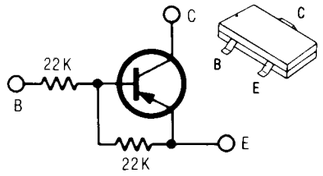

UN5112

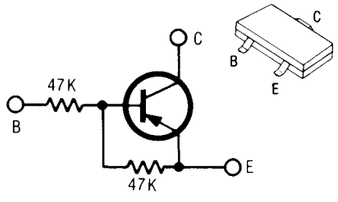

UN5113

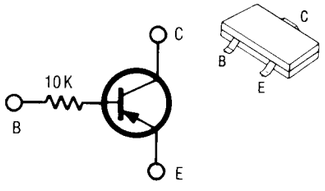

UN5115

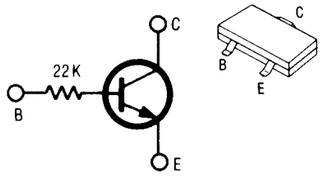

UN5217

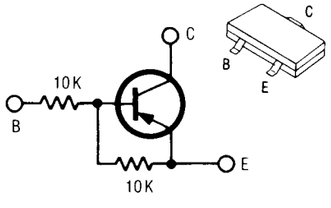

UN5111

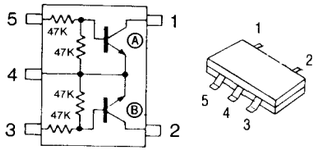

XN1213

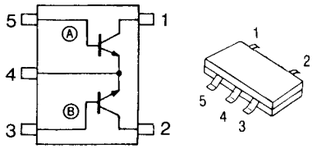

XN1501

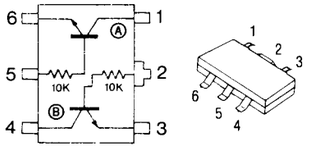

XN4215

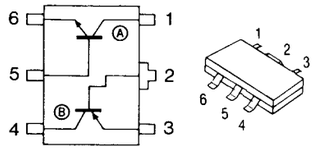

XN4601

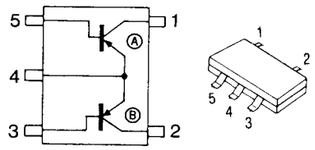

XN1401

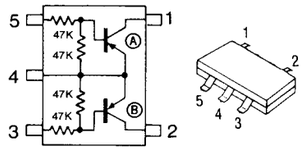

XN1113

PROCESS & ENCODER PACK

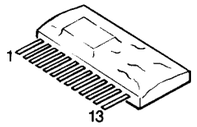

VCR0200

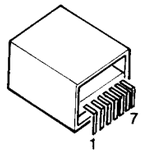

MC8181A

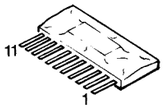

VCR0199

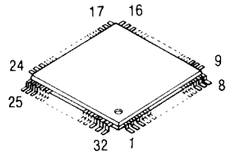

AN2253FA

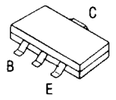

2SD874

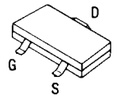

2SK316

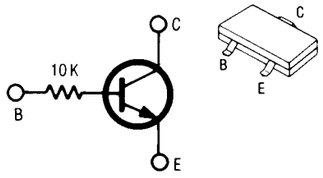

UN5215

AUTO FOCUS

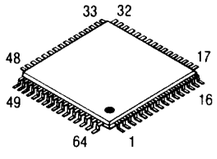

MN15865VYC

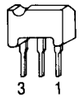

MN1280Q

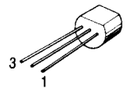

AN78N05

SENSOR & C.D.S. PACK

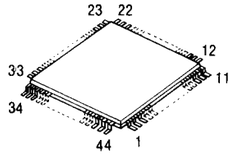

MN53015XBM

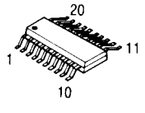

µPD6147G

POWER SUPPL

BA614

SYSTEM CONT

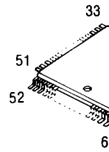

µPD7

LUMINANCE &

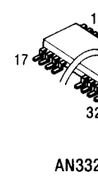

AN332

BA71

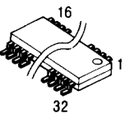

AN2583S
AN2153S
µPD6105G102

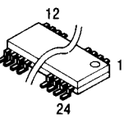

AN2510S
µPC2300G

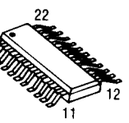

AN6367S
AN3592S
AN3311S

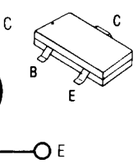

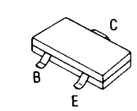

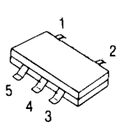

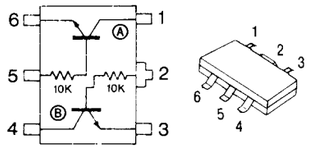

XN4215

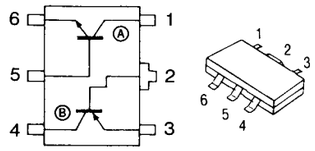

XN4601

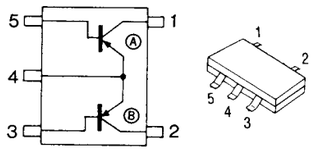

XN1401

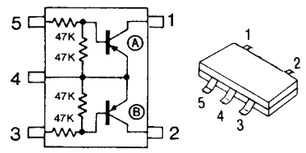

XN1113

PROCESS & ENCODER PACK

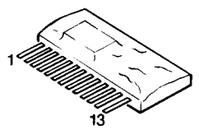

VCR0200

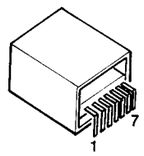

MC8181A

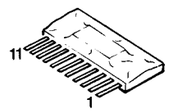

VCR0199

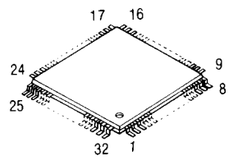

AN2253FA

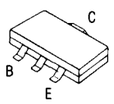

2SD874

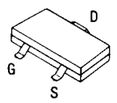

2SK316

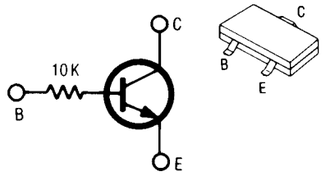

UN5215

AUTO FOCUS

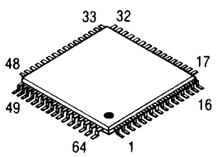

MN15865VYC

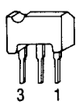

MN1280Q

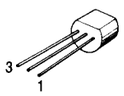

AN78N05

SENSOR & C.D.S. PACK

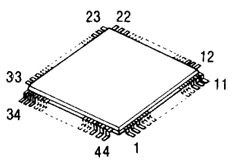

MN53015XBM

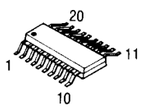

µPD6147G

POWER SUPPLY, SUB VIDEO & AUDIO Section

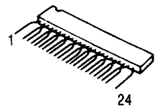

BA6149LS

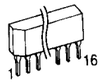

UN102

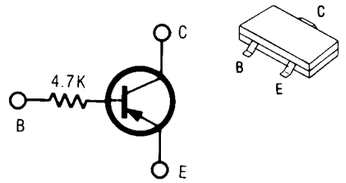

UN5116

SYSTEM CONTROL Section

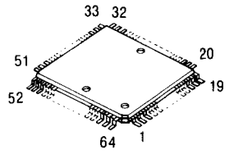

µPD75108G

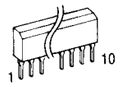

M54543ASL

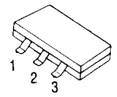

S81250HGRD

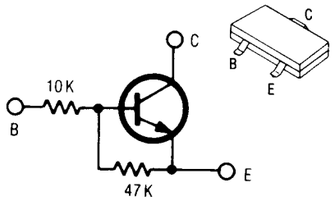

UN5214

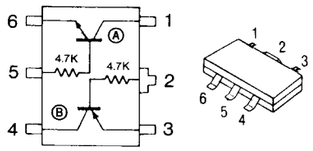

XN4316

LUMINANCE & CHROMINANCE

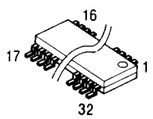

AN3321S

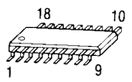

VC2031FP
MN6163AS

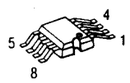

BA7131

SERVO Section

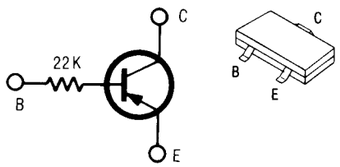

UN5117

SECTION 4
EXPLODED VIEWS & PARTS LIST

4-1. EXPLODED VIEWS ❶ VTR MECHNISM SECITON

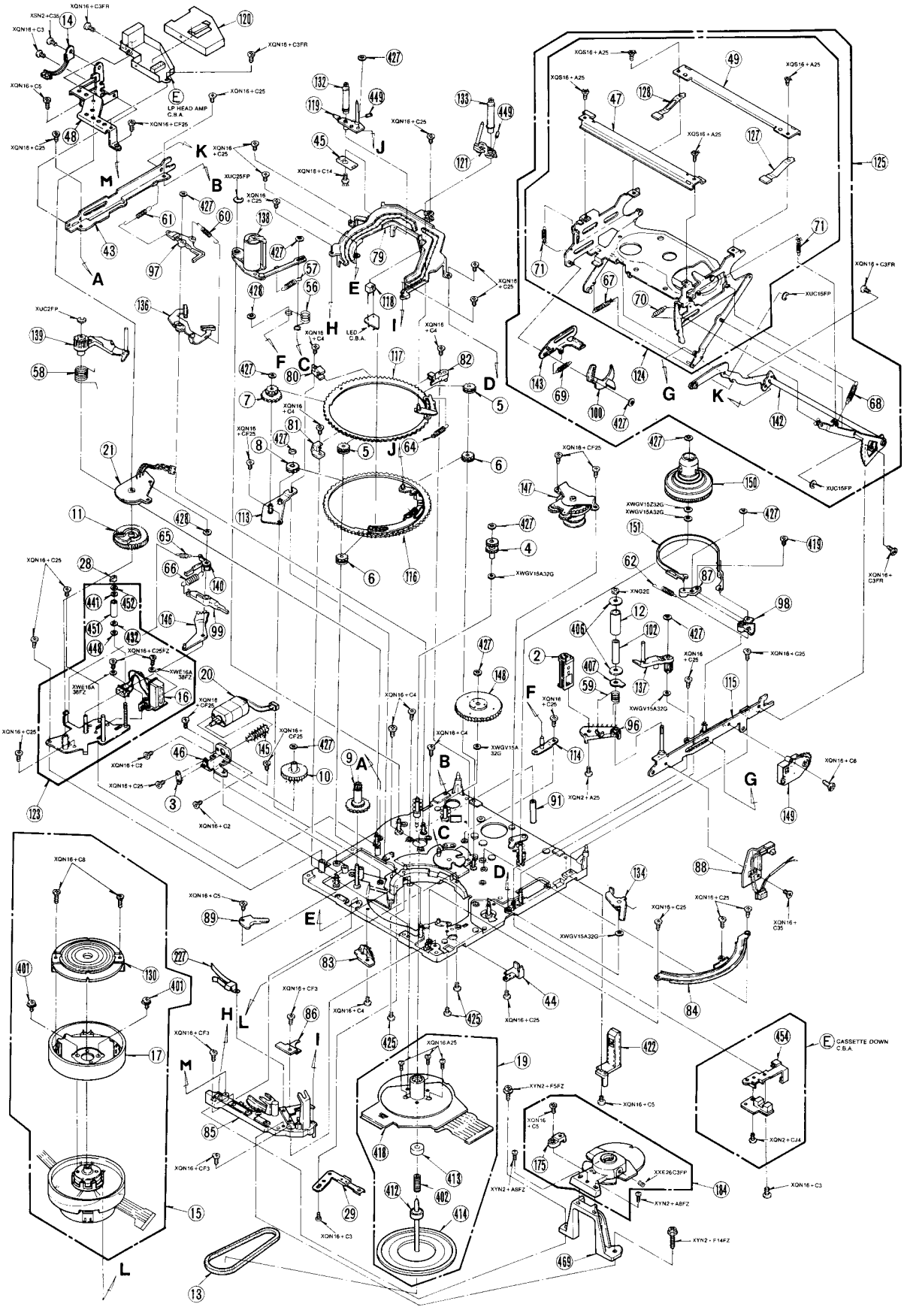

❷ CAMERA LENS SECTION

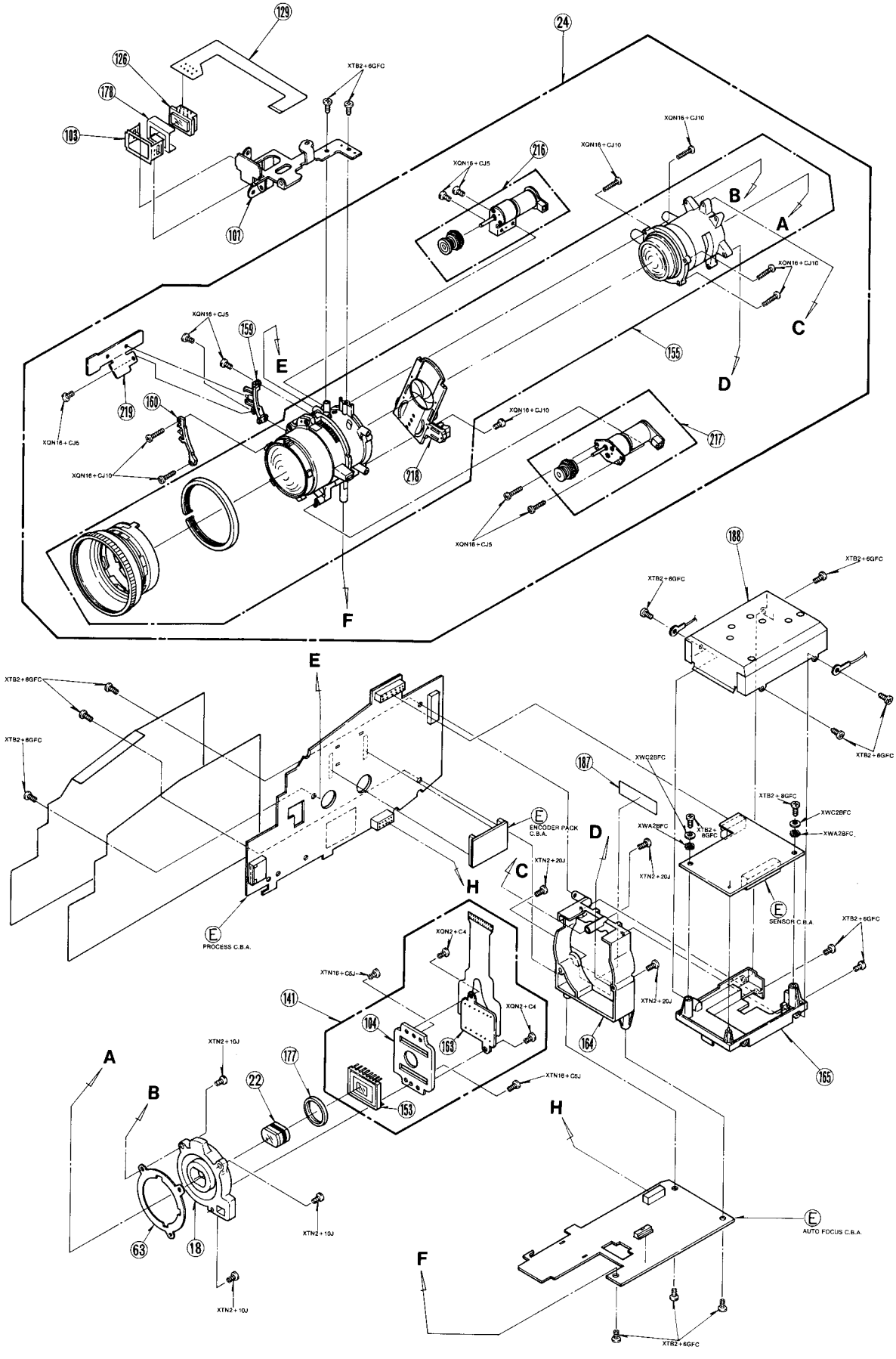

❸ CHASSIS & FRAME SECTION

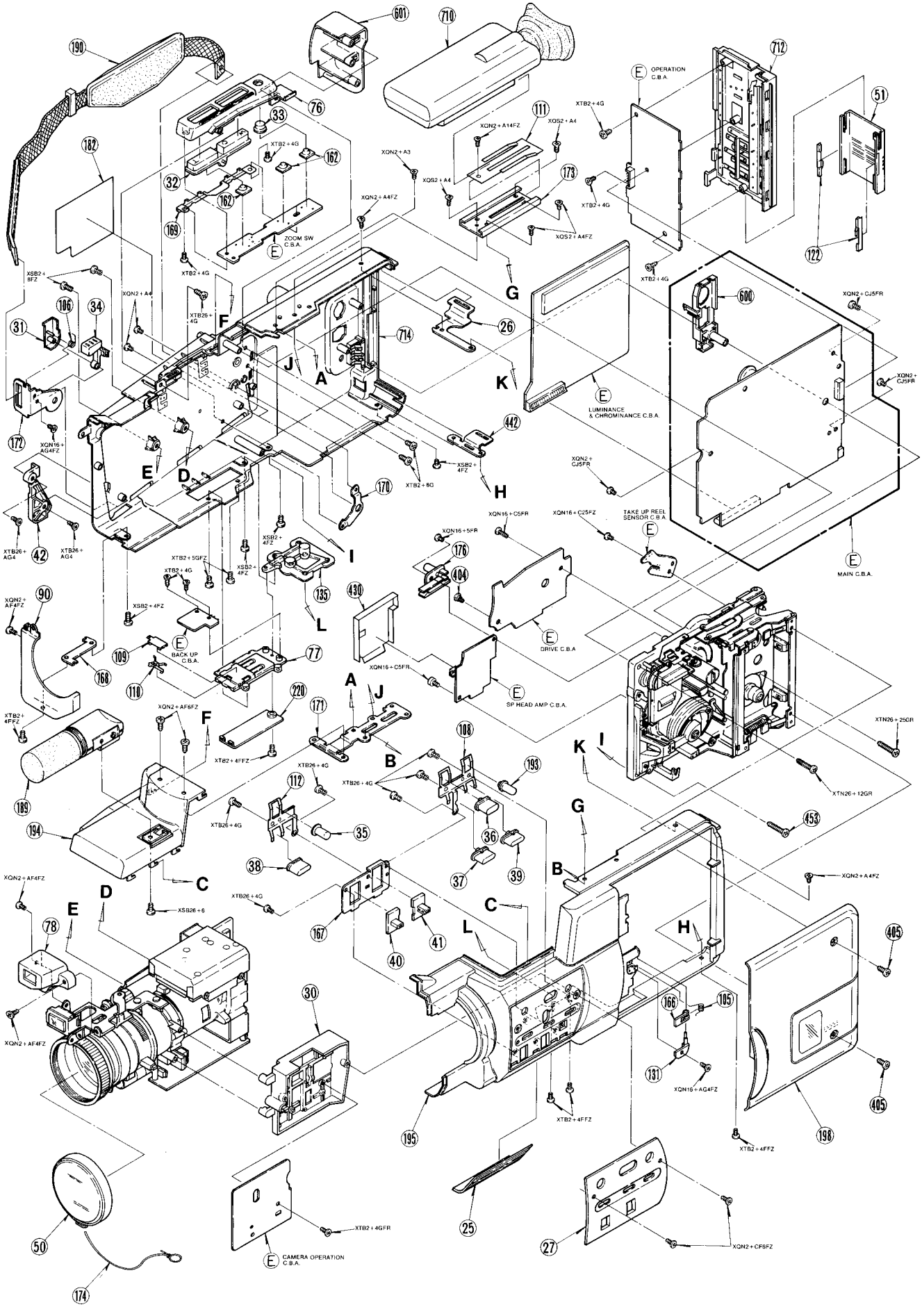

❹ E.V.F. SECTION

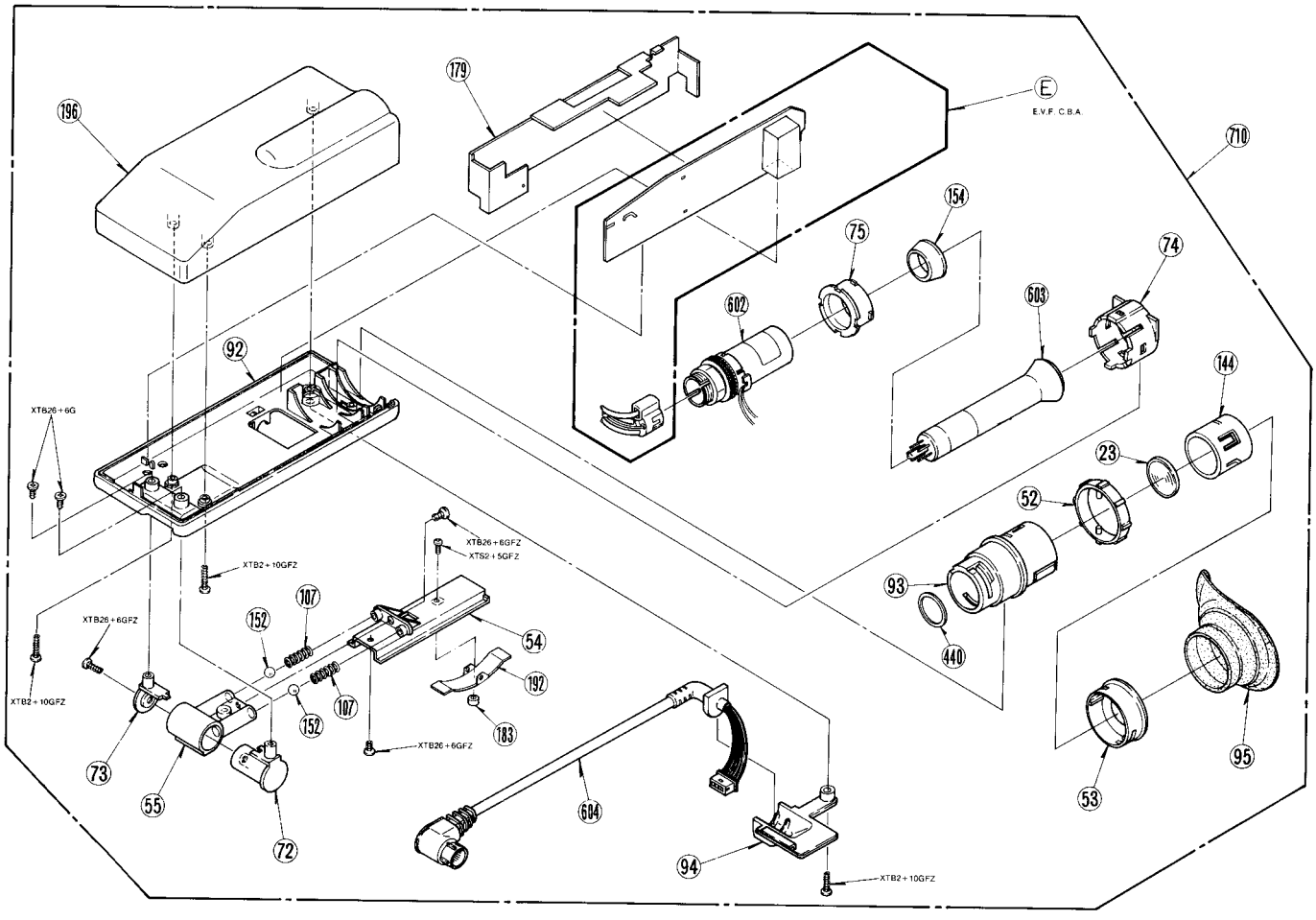

❺ PACKING PARTS & ACCESSORIES SECTION (NV-MC10B/A/EM/EA/EP)

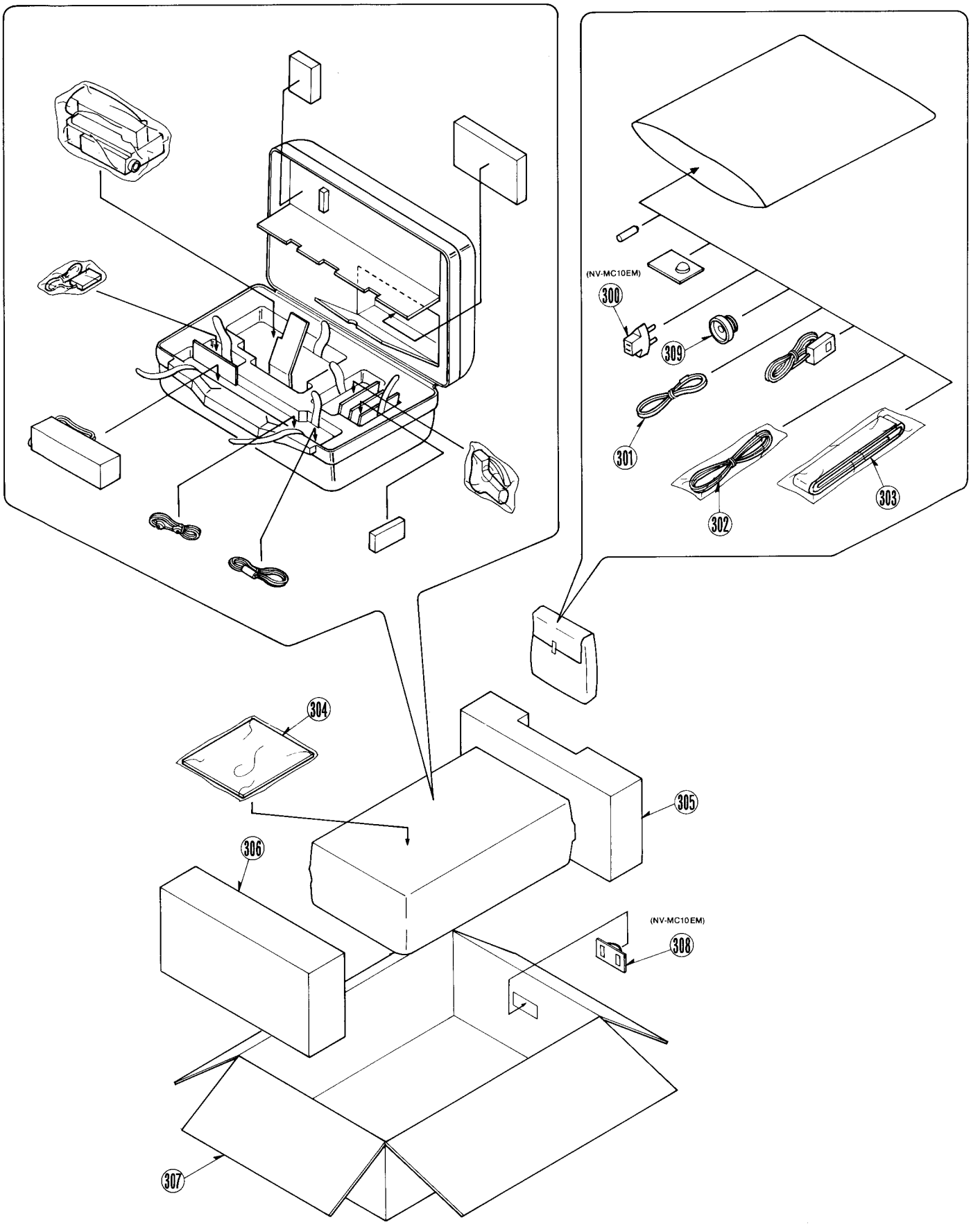

❻ PACKING PARTS & ACCESSORIES SECTION (NV-MC10EG/E/EN)

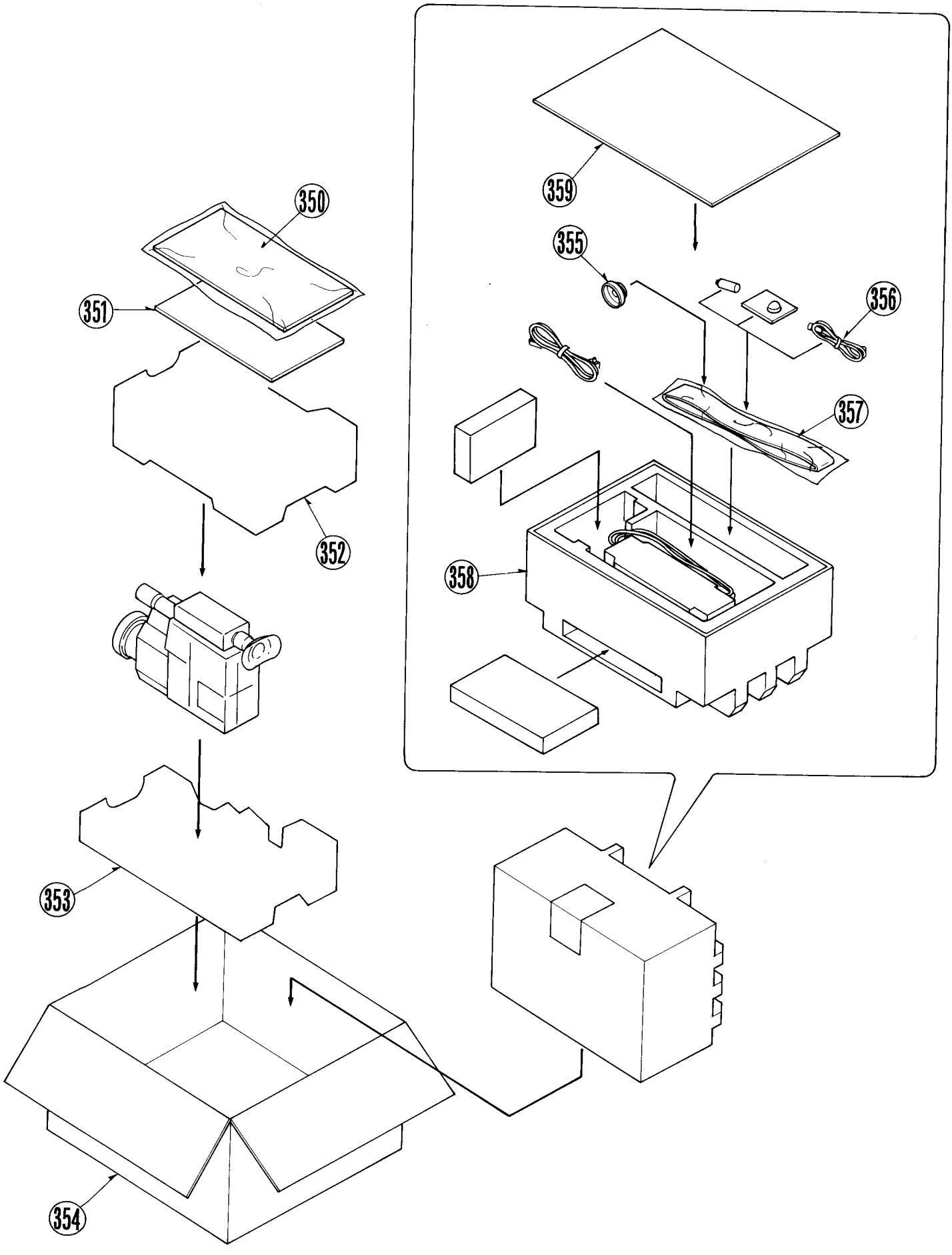

AC Adaptor

VW-AMC1 EG/E B/A EN/EM EA/EP

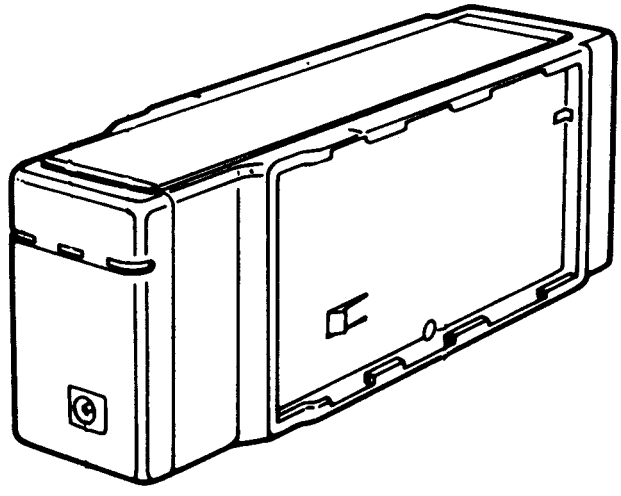

ITEM	SPECIFICATION	ITEM	SPECIFICATION
POWER	SOURCE: 100~240 V AC 50/60 Hz (Automatic Voltage Adjustment)	DIMENSIONS	53(W) × 68.5(H) × 191(D) mm
	CONSUMPTION: 25 watts	WEIGHT	0.56 kg
	OUTPUT: DC 9.6 V, 1.0 A for VHS-C Movie DC 9.6 V, 0.86 A for battery charge		

Weight and dimensions shown are approximate.
Specifications are subject to change without notice.

CAUTION: FOR USE WITH VHS-C VIDEO MOVIE, MODEL NV-MC10.

WARNING: TO PREVENT FIRE OR SHOCK HAZARD, DO NOT EXPOSE THIS EQUIPMENT TO RAIN OR MOISTURE.

CONTENTS

1. CONTROLS AND COMPONENTS 1
2. DISASSEMBLY PROCEDURES 1
3. AC ADAPTOR BLOCK DIAGRAM 3
4. AC ADAPTOR SCHEMATIC DIAGRAM 4
5. AC ADAPTOR CIRCUIT BOARDS 5
6. EXPLODED VIEWS 6
   1. CASING & CHASSIS PARTS SECTION 6
   2. PACKING PARTS SECTION 6

1. CONTROLS AND COMPONENTS

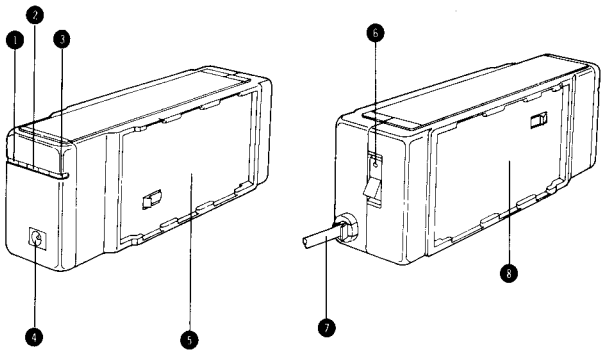

❶ Charge (1) Indicator Lamp
❷ Power Indicator Lamp
❸ Charge (2) Indicator Lamp
❹ DC Output Socket
❺ Battery Holder (2)
❻ Power Switch with Indicator Lamp
❼ AC Mains Lead
❽ Battery Holder (1)

2. DISASSEMBLY PROCEDURES

1.DISASSEMBLY FLOW CHART

This flow chart indicates the disassembly steps of the cabinet parts and the P.C. Boards in order to gain access to item(s) to be serviced.
When re-assembling, perform the step(s) in the reverse order.

Note:
When removing the Top Case Unit, work with care so as not to break the locking portions of the Top Case Unit.

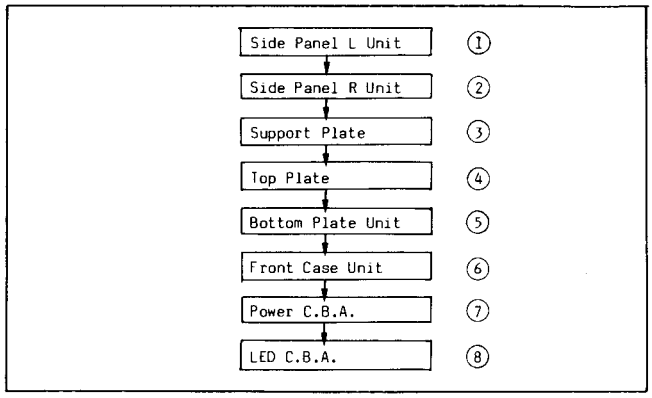

Fig. A1

2.DISASSEMBLY METHOD

Step /Loc No.	Part	REMOVAL		
		Fig. No.	Remove *UNLOCK/RELEASE/ UNPLUG/UNCLAMP	Note
①	Side Panel L Unit	D2	3(S-1), 2(S-2), 4(S-3), *2(L-1),	
②	Side Panel R Unit			
③	Support Plate	D2	----------	----
④	Top Plate	D3	*2(L-2)	----
⑤	Bottom Plate Unit	D3	----------	----
⑥	Front Case Unit	D4	*2(L-3), LED C.B.A.	----
⑦	Power C.B.A.	D3	----------	----
⑧	LED C.B.A.	D4	(L-4)	----

List of Abbreviations:
3(S-1) = 3 Screws (S-1)
2(L-1) = 2 Locking Tabs (L-1)

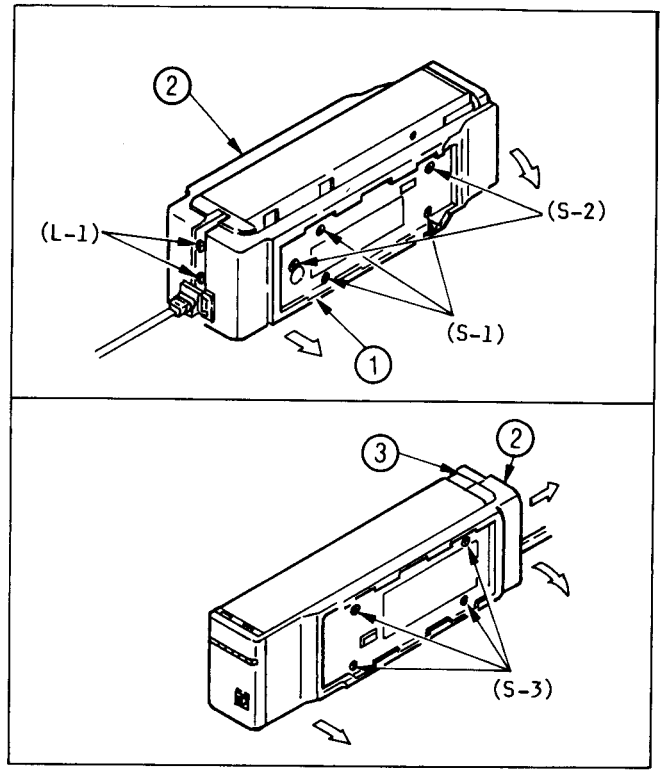

Fig. A2

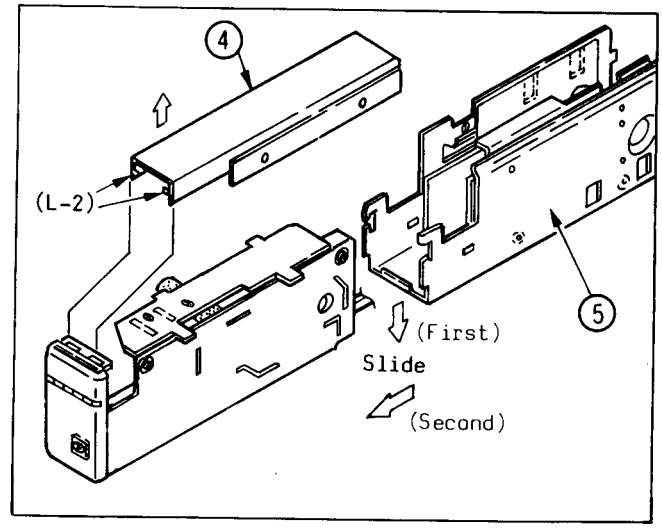

Fig. A3

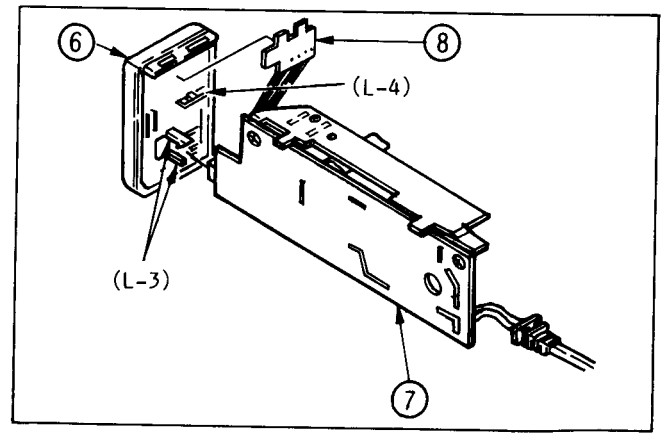

Fig. A4

3. AC ADAPTOR BLOCK DIAGRAM

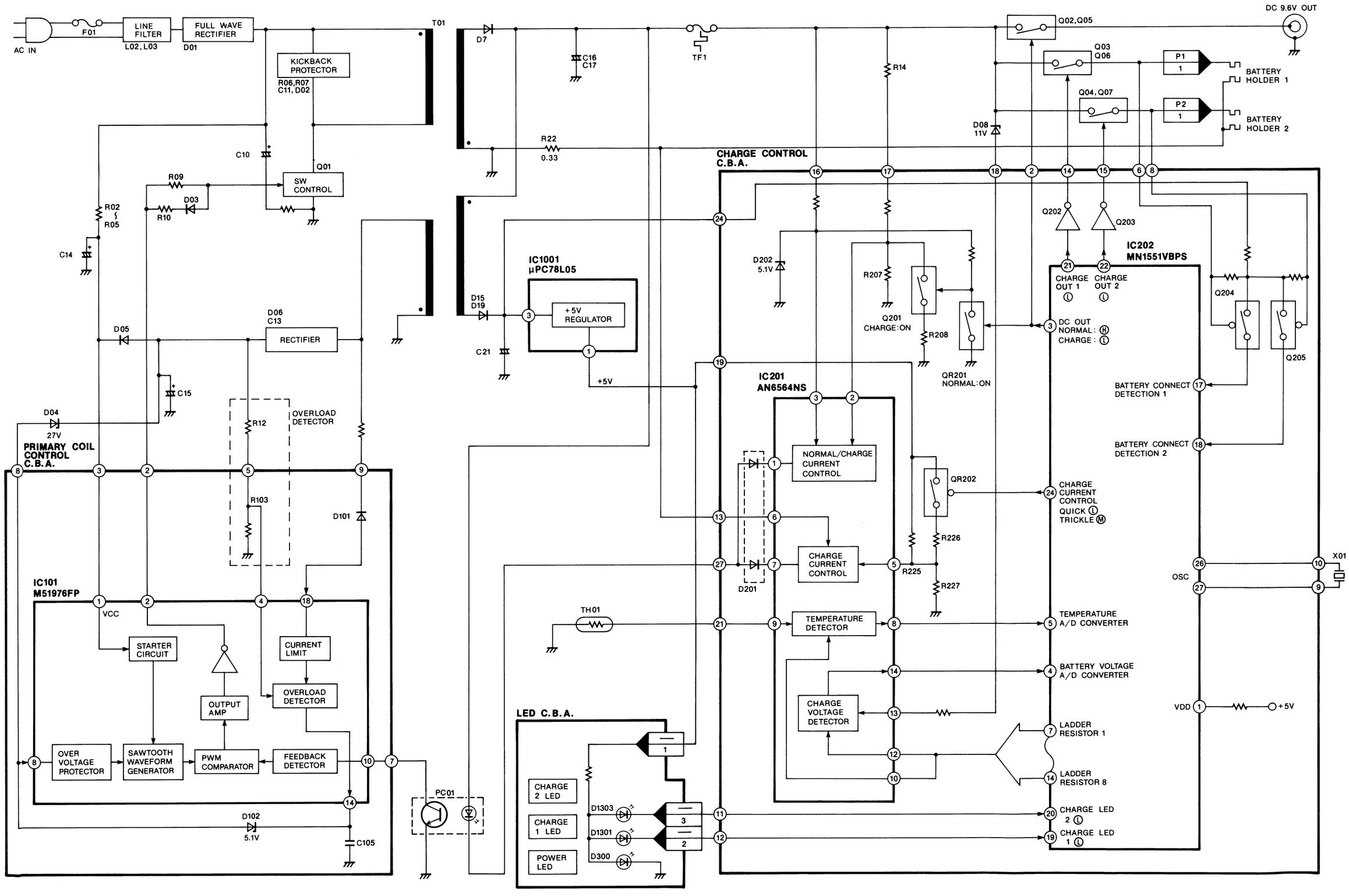

— 3 —

4. AC ADAPTOR SCHEMATIC DIAGRAM

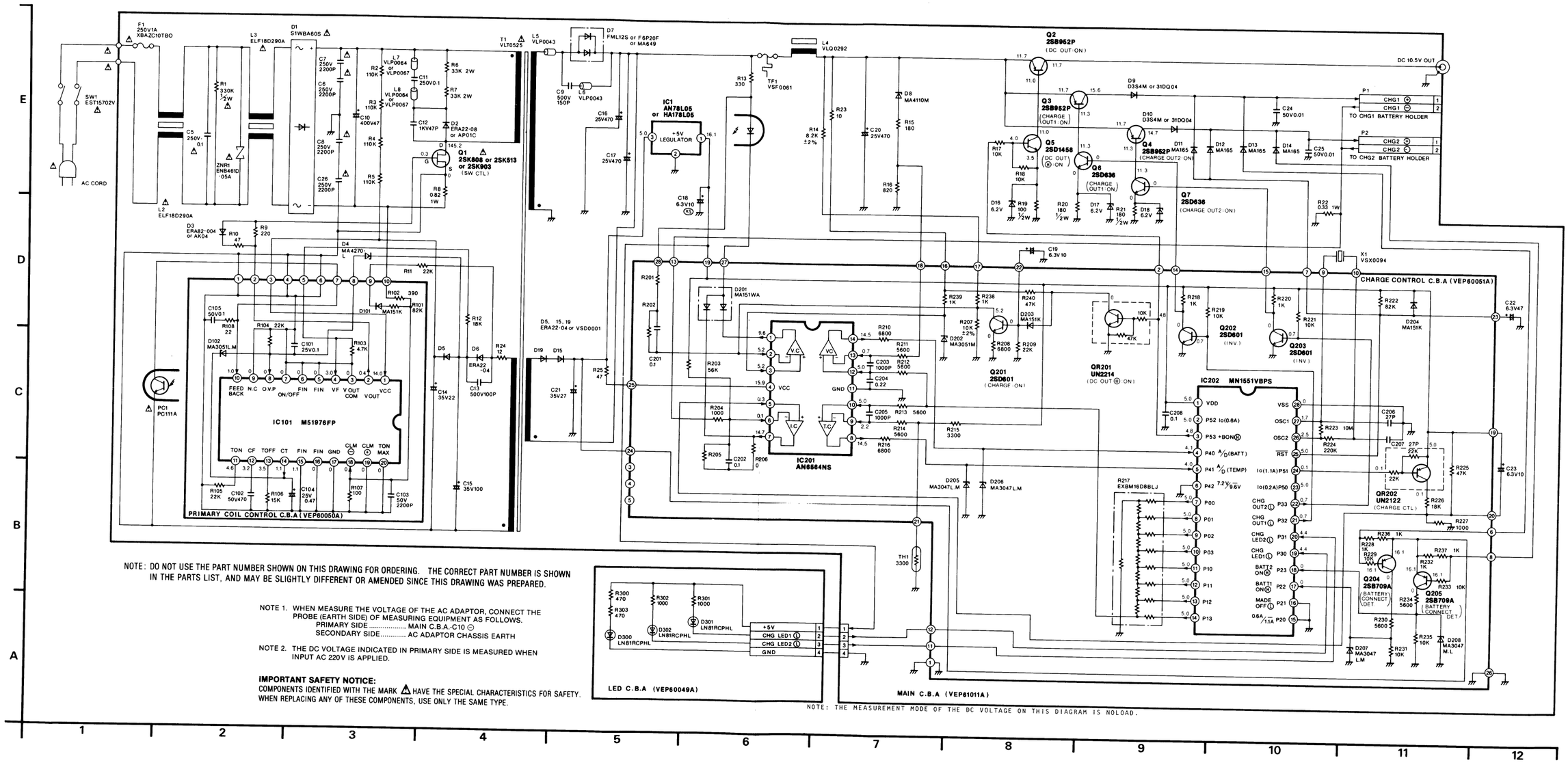

NOTE: DO NOT USE THE PART NUMBER SHOWN ON THIS DRAWING FOR ORDERING. THE CORRECT PART NUMBER IS SHOWN IN THE PARTS LIST, AND MAY BE SLIGHTLY DIFFERENT OR AMENDED SINCE THIS DRAWING WAS PREPARED.

NOTE 1. WHEN MEASURE THE VOLTAGE OF THE AC ADAPTOR, CONNECT THE PROBE (EARTH SIDE) OF MEASURING EQUIPMENT AS FOLLOWS.
PRIMARY SIDE ..... MAIN C.B.A.-C10 ⊖
SECONDARY SIDE..... AC ADAPTOR CHASSIS EARTH

NOTE 2. THE DC VOLTAGE INDICATED IN PRIMARY SIDE IS MEASURED WHEN INPUT AC 220V IS APPLIED.

IMPORTANT SAFETY NOTICE:
COMPONENTS IDENTIFIED WITH THE MARK ⚠ HAVE THE SPECIAL CHARACTERISTICS FOR SAFETY. WHEN REPLACING ANY OF THESE COMPONENTS, USE ONLY THE SAME TYPE.

NOTE: THE MEASUREMENT MODE OF THE DC VOLTAGE ON THIS DIAGRAM IS NOLOAD.

— 4 —

5. AC ADAPTOR CIRCUIT BOARDS

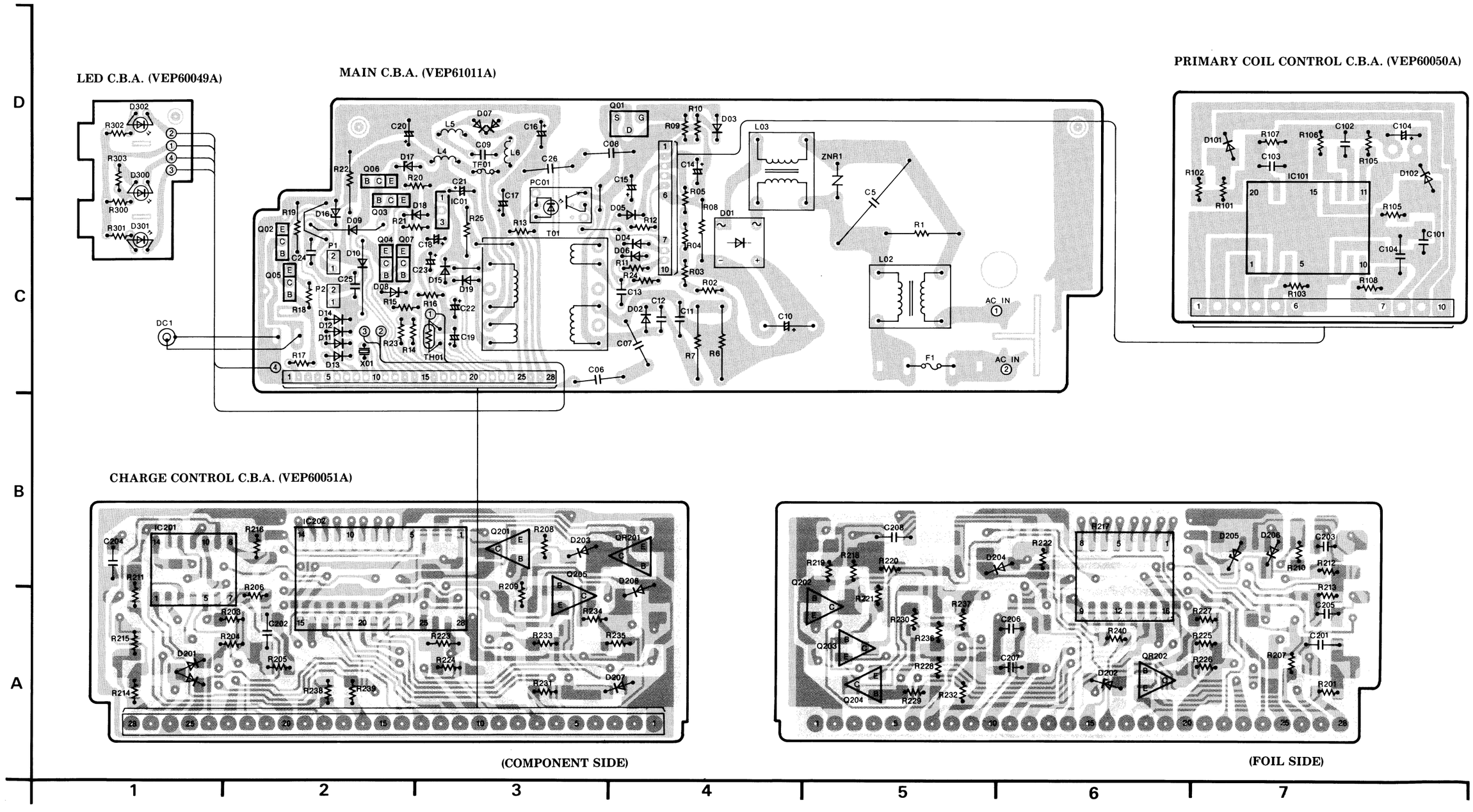

— 5 —

6. EXPLODED VIEWS

❶ CASING & CHASSIS PARTS SECTION

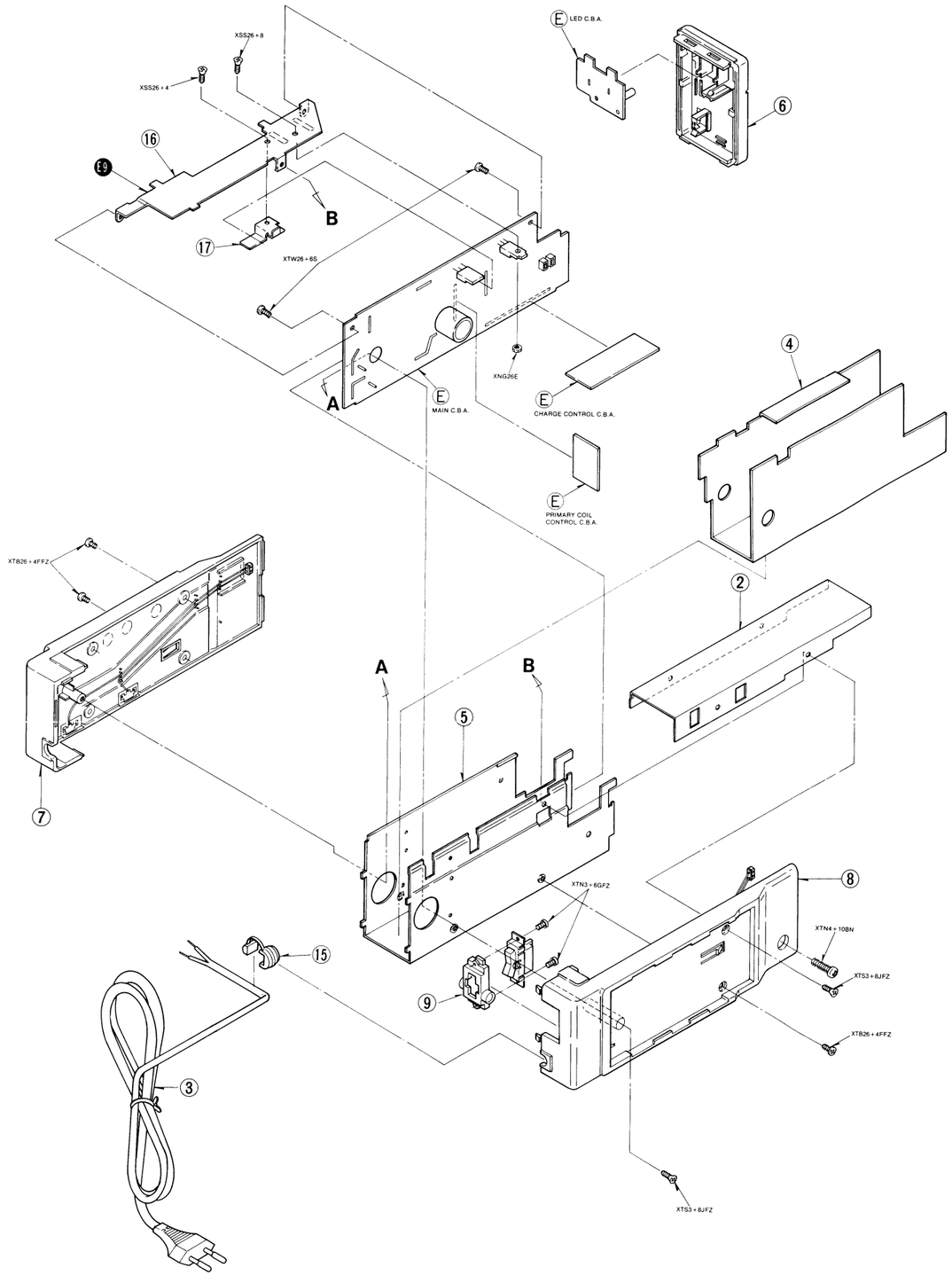

❷ PACKING PARTS SECTION

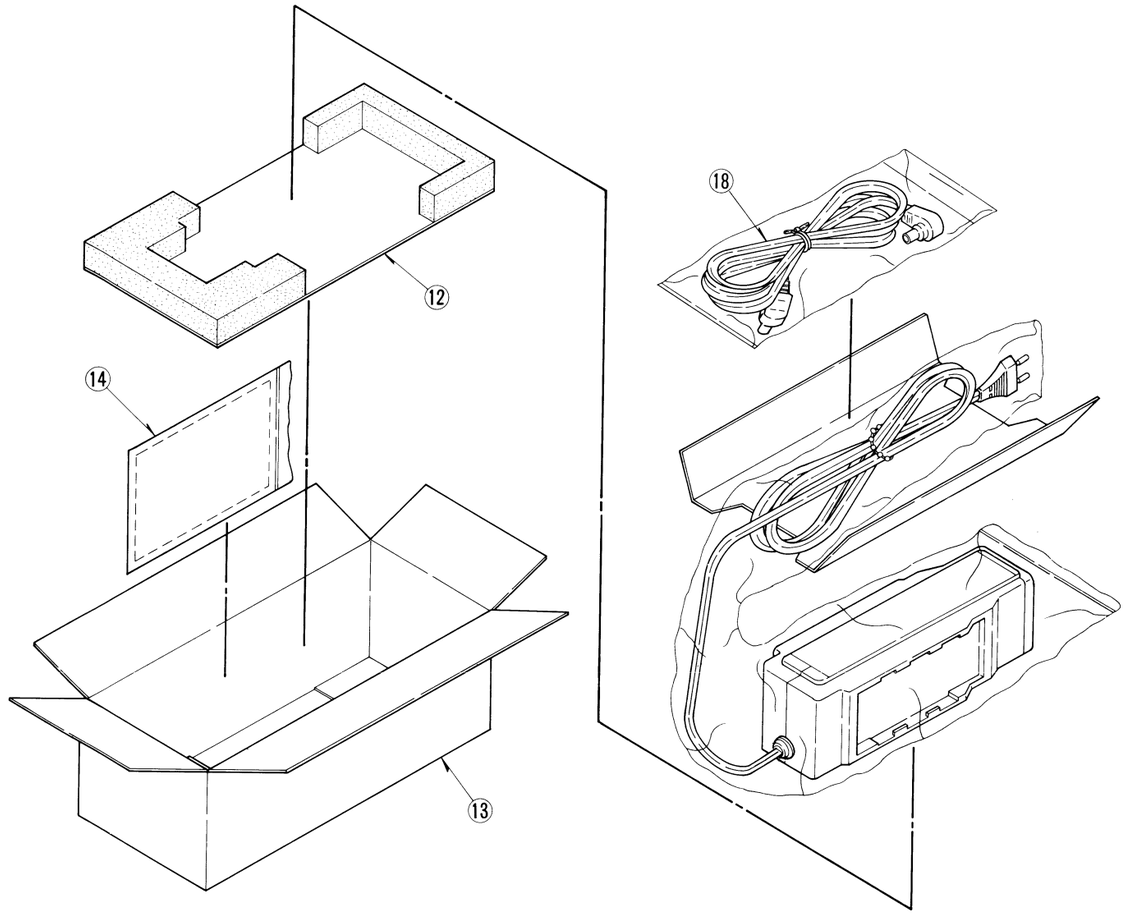

PARTS LIST

ORDER NO. VRD8709M153P
(Date of issue: SEP, 1987)

MODEL NO: NV-MC10E/EG/B/EP/A/EA/EN/EM, VW-AMC1E/B/A/EA/EN/EM

1.NV-MC10E/EG/B/EP/A/EA/EN/EM

Mechanical Replacement Parts List

※This parts list is detachable from the manual.

Note:1.* Be sure to make your orders of replacement parts according to this list.
2.IMPORTANT SAFETY NOTICE
Components identified with the mark <!> have the special characteristics for safety. When replacing any of these components,use only the same type.

Ref.No.		Part No.	Part Name & Description	Pcs	Remarks
* 2(1)		VBS0042	FE HEAD	1	
3(1)		VDB0894	WORM BEARING METAL	1	
4(1)		VDG0407	TAKEUP REEL GEAR	1	
5(1)		VDG0408	RING GUIDE GEAR (S)	2	
6(1)		VDG0409	RING GUIDE GEAR (T)	2	
7(1)		VDG0410	LOADING GEAR S	1	
8(1)		VDG0411	LOADING GEAR T	1	
9(1)		VDG0412	TERMINAL GEAR	1	
10(1)		VDG0413	MOTOR GEAR	1	
11(1)		VDK0017	CONTROL CAM	1	
12(1)		VDP1146	S1 ROLLER	1	
13(1)		VDV0170	DRIVE BELT	1	
14(1)		VEE3722	DEW SENSOR UNIT	1	
15(1)		VEG0576	DD CYLINDER UNIT	1	<!>
16(1)		VED0042	A/C HEAD UNIT	1	
17(1)		VEH0371	UPPER CYLINDER UNIT	1	
18(2)		VXQ0020	ACTUATER UNIT	1	
19(1)		VEM0284	CAPSTAN MOTOR UNIT	1	<!>
20(1)		VEM0292	LOADING MOTOR 1 UNIT	1	<!>
21(1)		VES0416	MODE SELECT SW UNIT	1	
22(2)		VDL0143A	CHRYSTAL FILTER UNIT	1	
23(4)		VDL0145	EVF LENS	1	
24(2)		VXW0001	LENS UNIT	1	
25(3)		VGQ1357	HAND PAD (R)	1	
26(3)		VMP1350	SHOULDER STRAP ANGLE	1	
			(UPPER)		
27(3)		VGP1726	CAMERA OPERATION PANEL	1	
28(1)		VMD1145	T3 POST CAP	1	
29(1)		VXS0077	EARTH BRUSH UNIT	1	
30(3)		VKM1077	CAMERA OPERATION BRACKET	1	
31(3)		VGQ1345	BATTERY FIXING HOLDER	1	
32(3)		VGU3926	ZOOM BUTTON	1	
33(3)		VGU3927	S/S BUTTON	1	
34(3)		VGU3928	BATTERY FIXING KNOB	1	
35(3)		VGU3932	REC. REVIEW BUTTON	1	
36(3)		VGU3933	BACK LIGHT BUTTON	1	
37(3)		VGU3936	HSS BUTTON	1	
38(3)		VGU3935	ZOOM FOCUS BUTTON	1	
39(3)		VGU3937	T/D BUTTON	1	
40(3)		VGU3939	AUTO/MANUAL KNOB	1	
41(3)		VGU3938	WHITE BALANCE KNOB	1	
42(3)		VKC0320	BATTERY FIXING HINGE	1	
43(1)		VMA7109	CASSETTE STAND (T)	1	
44(1)		VMA7112	MR SHIELD COVER	1	
45(1)		VMA7119	T1 SLIDE PLATE	1	
46(1)		VMA7120	LOADING MOTOR HOLDER	1	
47(1)		VMA7125	HOLDER STAY (R)	1	
48(1)		VMA7248	H.A PLATE	1	
49(1)		VMA7138	HOLDER STAY (F)	1	
50(3)		VKF0963	HOOD CAP	1	
51(3)		VKF0973	SLIDING LID	1	
52(4)		VGU3946	EYESIGHT CORRECTION RING	1	
53(4)		VJF0512	EYE CAP HOLDER	1	
54(4)		VGQ1347	EVF FOOT	1	
55(4)		VKC0323	ROTALY PIECE	1	
56(1)		VMB1705	CAM SPRING	1	
57(1)		VMB1774	PINCH ROLLER SPRING	1	
58(1)		VMB1707	TAPE GUIDE ARM SPRING	1	
59(1)		VMB1785	ERASE HEAD SPRING	1	
60(1)		VMB1710	SOFT BRAKE SPRING (1)	1	
61(1)		VMB1711	SOFT BRAKE SPRING (2)	1	
62(1)		VMB1786	TENSION SPRING	1	
63(2)		VMX1347	ACTUATER FRAME	1	
64(1)		VMB1714	LOADING SPRING (S)	1	
65(1)		VMB1717	TAPE GUIDE LEVER SPRING 1	1	
66(1)		VMB1718	TAPE GUIDE LEVER SPRING 2	1	
67(1)		VMB1719	SPRING (T)	1	
68(1)		VMB1720	SPRING (S)	1	
69(1)		VMB1721	OPEN SLIDE LEVER SPRING	1	
70(1)		VMB1722	LOCK SPRING	1	
71(1)		VMB1723	SAFETY SPRING (S)	2	
72(4)		VKC0321	ROTARY HOLDER (A)	1	
73(4)		VKC0322	ROTALY HOLDER (B)	1	
74(4)		VGF0244	CRT MASKING	1	
75(4)		VJF0513	CRT HOLDER	1	
76(3)		VKM1070	ZOOM CASE	1	
77(3)		VKM1071	BATTERY BRACKET	1	
78(3)		VKM1152	AWT SENSOR CASE	1	
79(1)		VMD1071	LOADING GUIDE	1	
80(1)		VMD1072	RING GUIDE (1)	1	
81(1)		VMD1073	RING GUIDE (2)	1	
82(1)		VMD1074	RING GUIDE (3)	1	
83(1)		VMD1100	LOADING GUIDE (T)	1	
84(1)		VMD1077	LOADING GUIDE (S)	1	
85(1)		VMD1168	V STOPPER BASE	1	
86(1)		VMD1079	SUPPLY GUIDE PLATE	1	
87(1)		VMD1082	BAND ADJUSTMENT PIECE	1	
88(1)		VEK3446	END SENSOR UNIT	1	
89(1)		VMD1104	RING LIMITER	1	
90(3)		VKM1153	LENS FRONT COVER	1	
91(1)		VMD1156	C.B. STOPPER	1	
92(4)		VKM1079	EVF BOTTOM CASE	1	
93(4)		VKM1080	EYESIGHT CORRECTION CASE	1	
94(4)		VJF0514	CABLE HOLDER	1	
95(4)		VMG0408	EYE CAP	1	
96(1)		VML2102	ERASE HEAD LEVER	1	
97(1)		VML2026	SOFT BRAKE ARM	1	
98(1)		VML2028	BAND ARM	1	
99(1)		VML2032	TAPE GUIDE LEVER 1	1	
100(1)		VML2040	OPEN LEVER	1	
101(2)		VMP1353	AWT SENSOR ANGLE	1	
102(1)		VMX0876	S1 COLLAR	1	
103(2)		VMP1105	AWT SENSOR HOOK	1	
104(2)		VMA7183	CCD PLATE	1	
105(3)		VMB1745	SAFETY LEVER SPRING	1	
106(3)		VMB1744	BATTERY FIXING SPRING	1	
107(4)		VMC0337	COIL SPRING	2	
108(3)		VMC0331	RETURN SPRING (A)	1	
109(3)		VMC0326	BATTERY TERMINAL BOARD (A)	1	
110(3)		VMC0327	BATTERY TERMINAL BOARD (B)	1	
111(3)		VMC0328	SHOE SPRING	1	
112(3)		VMC0346	RETURN SPRING (B)	1	
113(1)		VXA3052	LOADING GEAR BASE UNIT	1	
114(1)		VXA3033	CASSETTE SUPPORT PLATE UNIT	1	
115(1)		VXA3053	CASSETTE STAND S1 UNIT	1	
116(1)		VXA3037	LOADING RING (T) UNIT	1	
117(1)		VXA3061	LOADING RING S1 UNIT	1	
118(1)		TLN107A	SENSOR LED	1	
119(1)		VXA3062	SHAFT HOLDER T1 UNIT	1	
120(1)		VSC2212	LP,HA SHIELD CASE (UPPER)	1	
121(1)		VXA3064	SHAFT HOLDER S1 UNIT	1	
122(3)		VMC0335	SLIDING LID SPRING	2	
123(1)		VXA3041	A/C HEAD BASE UNIT	1	
124(1)		VXA3043	CASSETTE HOLDER UNIT	1	
125(1)		VXA3034	CASSETTE UP UNIT	1	
126(2)		VEK3435	AWT SENSOR UNIT	1	
127(1)		VXA2958	CATCH PLATE (S) UNIT	1	
128(1)		VXA2959	CATCH PLATE (T) UNIT	1	
129(2)		VWJ0308	AWT FLEXIBLE CABLE	1	
130(1)		VET0043	UPPER RT (R) UNIT	1	
131(3)		VMD1123	LEVER HOLDER	1	
132(1)		VXJ0063	T1 ROLLER POST UNIT	1	
133(1)		VXJ0062	S1-ROLLER POST UNIT	1	
134(1)		VXL1657	EJECT LEVER UNIT	1	
135(3)		VMD1122	TRIPOD FIXING BRACKET	1	
136(1)		VXL1670	SOFT BRAKE UNIT	1	
137(1)		VXL1658	TENSION ARM UNIT	1	
138(1)		VXL1674	PRESSURE LEVER UNIT	1	
139(1)		VXL1660	TAPE GUIDE ARM UNIT	1	
140(1)		VXL1675	TAPE GUIDE LEVER 2 UNIT	1	
141(2)		VEK3393	CCD UNIT	1	
142(1)		VXL1732	MAIN ARM (1) UNIT	1	
143(1)		VXL1676	OPEN SLIDE LEVER (1) UNIT	1	
144(4)		VJF0511	LENS HOLDER	1	
145(1)		VXP0905	WORM GEAR UNIT	1	

Ref.No.		Part No.	Part Name & Description	Pcs	Remarks
146(1)		VXP0904	SECTOR GEAR UNIT	1	
147(1)		VXP0922	IDLER UNIT	1	
148(1)		VXP0890	CLUTCH GEAR (T) UNIT	1	
149(1)		VXP0891	DAMPER UNIT	1	
150(1)		VXR0169	SUPPLY REEL TABLE UNIT	1	
151(1)		VXZ0249	TENSION BAND UNIT	1	
152(4)		VMP1358	STEEL BALL	2	
153(2)		MN3745F	CCD	1	
154(4)		VMX1004	CRT RUBBER	1	
155(2)		VXW0019	LENS ASSEMBLY	1	
159(2)		VJF0518	ENCODER HOLDER (B)	1	
160(2)		VJF0517	ENCODER HOLDER (A)	1	
161(2)		VXA3245	PROCESS C.B.A. SHIELD CASE	1	
162(3)		VMG0358	ZOOM SW	1	
163(2)		VWJ0289	CCD FLEXIBLE CABLE UNIT	1	
164(2)		VJF0519	SENSOR FRAME	1	
165(2)		VMD1143	SENSOR C.B.A. FRAME	1	
166(3)		VML2063	SAFETY LEVER	1	
167(3)		VMP1354	KNOB ANGLE	1	
168(3)		VMP1356	LENS FRONT COVER ANGLE	1	
169(3)		VMP1347	ZOOM CASE ANGLE	1	
170(3)		VMP1351	GRIP BELT ANGLE (REAR)	1	
171(3)		VMP1352	EVF SHOE FIXING ANGLE	1	
172(3)		VMP1349	GRIP BELT ANGLE	1	
173(3)		VMP1348	EVF SHOE	1	
174(3)		VGQ1349	HOOD STRAP	1	
175(1)		VMD1132	LEAD CLUMPER	1	
176(3)		VMX1253	C.B. SPACER	1	
177(2)		VMX1276	CCD CUSHION	1	
178(2)		VGF0210	AWT COVER	1	
179(4)		VMZ1076	EVF BARRIER	1	
182(3)		VGH1401	BATTERY NAME PLATE	1	
183(4)		VMD1207	HOLDER	1	
184(1)		VET0049	UPPER RT (S) ARM UNIT	1	
187(2)		VSC2399	SENSOR FRAME SHIELD	1	
188(2)		VSC2155	SENSOR SHIELD	1	
189(3)		VEK3449	MIC UNIT	1	
190(3)		VYC0212	GRIP BELT UNIT	1	NV-MC10EG/B/E/EP/A/EA
190(3)		VYC0205	GRIP BELT UNIT	1	NV-MC10EN/EM
192(4)		VML2118	LEVER	1	
193(3)		VGU3934	FADE BUTTON	1	
194(3)		VKM1301	TOP CASE	1	
195(3)		VKM1106	SIDE CASE (R)	1	NV-MC10EN/EM
195(3)		VKM1105	SIDE CASE (R)	1	NV-MC10EG/B/E/EP/A/EA
196(4)		VKM1154	EVF TOP CASE	1	NV-MC10EG/E/EP/A/EA
196(4)		VYK2005	EVF TOP CASE	1	NV-MC10B
196(4)		VKM1318	EVF TOP CASE	1	NV-MC10EN/EM
198(3)		VGP1751	CASSETTE COVER	1	
216(2)		VEM0286	ZOOM MOTOR	1	
217(2)		VEM0285	AUTO FOCUS MOTOR	1	
218(2)		VXL1635	IRIS UNIT	1	
219(2)		VEP30038A	ENCODER C.B	1	
220(3)		VKF0957	BACKUP BATTERY LID	1	
227(1)		VMC0360	PRESSURE PLATE	1	
300(5)		VJSS0070	AC PLUG ADAPTOR	1	NV-MC10EM
301(5)		VFA0050	AV OUTPUT CABLE	1	NV-MC10B/EP
301(5)		VFA0049	AV OUTPUT CABLE	1	NV-MC10A/EA/EM
302(5)		VJA0376	DIN RF CABLE	1	NV-MC10B/EP/EN/A/EA
					/EM
303(5)		VFC0130	SHOULDER STRAP	1	NV-MC10B/EP/A/EA
303(5)		VFC0131	SHOULDER STRAP	1	NV-MC10EM
304(5)		VQT2557	OPERATING INSTRUCTIONS	1	NV-MC10B(ENGLISH)<!>
304(5)		VQT2430	OPERATING INSTRUCTIONS	1	NV-MC10EP(ENGLISH/
					GERMAN/FRENCH)<!>
304(5)		VQT2432	OPERATING INSTRUCTIONS	1	NV-MC10EP(SPANISH/
					ITALY/DATCH)<!>
304(5)		VQT2434	OPERATING INSTRUCTIONS	1	NV-MC10EN(ENGLISH/CHI
					CHINESE)<!>
304(5)		VQT2433	OPERATING INSTRUCTIONS	1	NV-MC10A(ENGLISH)<!>
304(5)		VQT2435	OPERATING INSTRUCTIONS	1	NV-MC10EA(ENGLISH)<!>
304(5)		VQT2436	OPERATING INSTRUCTIONS	1	NV-MC10EM(ENGLISH/
					ALABIC)<!>
304(5)		VQT2437	OPERATING INSTRUCTIONS	1	NV-MC10EM(HINDY/URDU)
					<!>
305(5)		VPN1994	CUSHION (R)	1	NV-MC10B/EP/A/EA/EM

Ref.No.		Part No.	Part Name & Description	Pcs	Remarks
306(5)		VPN1995	CUSHION (L)	1	NV-MC10B/EP/A/EA/EN
307(5)		VPG3701	PACKING CASE	1	NV-MC10B
307(5)		VPG3787	PACKING CASE	1	NV-MC10EP
307(5)		VPG3705	PACKING CASE	1	NV-MC10EN
307(5)		VPG3704	PACKING CASE	1	NV-MC10A
307(5)		VPG3706	PACKING CASE	1	NV-MC10EA
308(5)		VPN1409	HANDLE	1	NV-MC10EM
309(5)		VDW0069	HOOD	1	NV-MC10B/EP/EN/A/EA
					/EM
350(6)		VQT2430	OPERATING INSTRUCTIONS	1	NV-MC10E/EG(ENGLISH
					GERMAN/FRENCH)<!>
350(6)		VQT2431	OPERATING INSTRUCTIONS	1	NV-MC10E(SWEDISH/
					DENISH/FINNISH)<!>
350(6)		VQT2432	OPERATING INSTRUCTIONS	1	NV-MC10E(SPANISH/
					ITALY/DATCH)<!>
351(6)		VPN1998	TOP PAD	1	NV-MC10E/EG
352(6)		VPN1958	CUSHION (UPPER)	1	NV-MC10E/EG/EN
353(6)		VPN1959	CUSHION (LOWER)	1	NV-MC10E/EG/EN
354(6)		VPG3702	PACKING CASE	1	NV-MC10EG
354(6)		VPG3703	PACKING CASE	1	NV-MC10E
354(6)		VPG3707	PACKING CASE	1	NV-MC10EN
355(6)		VDW0069	HOOD	1	NV-MC10E/EG/EN
356(6)		VFA0050	AV OUTPUT CABLE	1	NV-MC10E/EG
356(6)		VFA0049	AV OUTPUT CABLE	1	NV-MC10EN
357(6)		VFC0130	SHOULDER STRAP	1	NV-MC10E/EG
357(6)		VFC0131	SHOULDER STRAP	1	NV-MC10EN
358(6)		VPN1996	ACCESSORIES BOX	1	NV-MC10E/EG/EN
359(6)		VPN1997	PAD (A)	1	NV-MC10E/EG/EN
360(6)		VPN2008	HANDLE	1	NV-MC10EN
400(1)		VMX1247	S1 LIMITER	2	
401(1)		VHD0288	P3 ADJUST SCREW	2	
402(1)		VMB1734	THRUST SPRING	1	
404(3)		VHD0363	SCREW	2	
405(3)		VHD0377	CASSETTE COVER SCREW	2	
407(1)		VMX1252	S1 SPACER	1	
412(1)		VDB0899	UNDER BEARING	1	
413(1)		VDB0898	UPPER BEARING	1	
414(1)		VXP0873	ROTOR UNIT	1	
418(1)		VEK3345	STATOR UNIT	1	
419(1)		VHD0390	SCREW	1	
422(1)		VEK3501	SAFETY TAB SW	1	
425(1)		VHD0389	SCREW	3	
427(1)		VMX1061	CUT WASHER (A)	12	
428(1)		VMX1042	CUT WASHER (B)	2	
430(3)		VSC2210	SP,HA SHIELD CASE (UPPER)	1	
432(1)		VMD1189	T3 POST BOTTOM	1	
440(4)		VMX1322	O RING	1	
441(1)		VMS3608	SPACER	1	
442(3)		VMP1355	SHOULDER STRAP ANGLE	1	
			(LOWER)		
448(1)		VMB1716	T3 POST SPRING	1	
449(1)		VHD0392	SCREW	2	
451(1)		VMX1251	P1 SPACER	1	
452(1)		VHN0065	T3 POST NUT	1	
453(3)		VHD0395	SCREW	1	
454(1)		VMD1103	CASSETTE DOWN C.B HOLDER	1	
469(1)		VMA7050	STATOR ARM (2)	1	
600(3)		VJF0509	JACK HOLDER	1	
601(3)		VKF0970	GRIP BELT ANGLE COVER	1	
602(4)		ELY07V552B	DY	1	<!>
603(4)		M01JVV47WB	CRT	1	<!>
604(4)		VEK3437	10P CABLE	1	
710(3)		VEK3425	EVF UNIT	1	NV-MC10EG/A/EA/E/EP
710(3)		VEK3452	EVF UNIT	1	NV-MC10B
710(3)		VEK3451	EVF UNIT	1	NV-MC10EN/EM
712(3)		VYK1733	VTR OPERATION CASE (1) UNIT	1	
714(3)		VYK1729	SIDE CASE (L) (1) UNIT	1	
			SERVICE FIXTURES		
		VFM8180H8PF	VHS-C ALIGNMENT TAPE (PAL)	1	
		VFK0326	HEX WRENCH SET	1	

Ref.No.		Part No.	Part Name & Description	Pcs	Remarks
		VFK27	HEAD CLEANING STICK	1	
		MOR265	MORYTONE GREASE	1	
		VFKS0067	EXTENSION CABLE	1	
		VFKS0075	EXTENSION CABLE	1	
		VFKS0068	EXTENSION CABLE	2	
		VFKS0060	EXTENSION CABLE	1	
		VFK0430	EXTENSION CABLE	1	
		VFK0380	EXTENSION CABLE	1	
		VFKS0074	EXTENSION CABLE	1	
		VFK0374	C12 FILTER	1	
		VFK0375	C2 FILTER	1	
		VFK0382	CAMERA HOLDER	1	
		VFK0431	CAMERA HOLDER ARM	1	
		VFK0432	HOLDER SPACER	2	
		XSN26+18	SCREW	2	

2. Electrical Replacement Parts List

Note: 1.* Be sure to make your orders of replacement parts according to this list.
2. IMPORTANT SAFETY NOTICE
Components identified with the mark <!> have the special characteristics for safety. When replacing any of these components, use only the same type.
3. Unless otherwise specified,
All resistors are in OHMS ,K=1,000 OHMS. All capacitors are in MICROFARADS(uf),P=uuF.
4. The P.C.Board units marked width'■'show below the main assembled parts.

Ref.No.		Part No.	Part Name & Description	Pcs	Remarks
			CAMERA SECTION		
		VEP22073A	SENSOR C.B.A.	1	
		VEP22074A	C.D.S. PACK C.B.A.	1	
		VEP23064B	PROCESS C.B.A.	1	
		VEP23061B	ENCODER PACK C.B.A.	1	
		VEP28015B	AUTO FOCUS C.B.A.	1	
			E.V.F. SECTION		
		VEP27036B	E.V.F. C.B.A.	1	
			VTR SECTION		
		VEP06478A	MAIN C.B.A.	1	
			(POWER,SERVO,AUDIO,SYSTEM		
			CONTROL,SUB VIDEO)		
		VEP06486A	SUB SYSTEMCONTROL C.B.A.	1	
		VEP03471B	LUMINANCE/CHROMINANCE C.B.A	1	
		VEP02297A	DRIVE C.B.A.	1	
		VEP05112B	SP HEAD AMP C.B.A.	1	
		VEP05115B	LP HEAD AMP C.B.A.	1	
		VEP06444B	VTR OPERATION C.B.A.	1	
		VEP06445A	CAMERA OPERATION C.B.A.	1	
		VEK3453	ZOOM SW C.B.A.	1	
		VEK3454	BACK UP C.B.A.	1	
		VEK3455	TAKEUP REEL SENSOR C.B.A.	1	
		VXA3107	CASSETTE DOWN C.B.A.	1	
		VEK3345	STATOR C.B.A.	1	
	■	VEP22073A	SENSOR C.B.A.		

Ref.No.		Part No.	Part Name & Description	Pcs	Remarks
			CONNECTORS		
B201		VJP1948	CONNECTOR (MALE)	1	
FP201		VJS2125	CONNECTOR	1	
			CAPACITORS		
C201		ECSF1AE476	TANTALUM 10V 47U	1	
C202		ECUX1E105JCM	CHIP 25V 1U	1	
C203		ECUX1E105JCM	CHIP 25V 1U	1	
C204		ECUX1H390JCM	CHIP 50V 39P	1	
C206		ECRLC010A12V	TRIMMER	1	
C207		ECSF1AE106	TANTALUM 10V 10U	1	
C208		ECEA0JKS220	E.CAPACITOR 6.3V 22U	1	
C209		ECSF1CE336	TANTALUM 16V 33U	1	
C210		ECEA1HKS010	E.CAPACITOR 50V 1U	1	
C211		ECUM1H104MD	CHIP 50V 0.1U	1	
C212		ECSF1EE106	T.CAPACITOR 25V 10U	1	
C213		ECUX1E473FN	CHIP 25V 0.047U	1	
C214		ECEA1HKS010	E.CAPACITOR 50V 1U	1	
C215		ECUX1E270JCM	CHIP 25V 27P	1	
C216		ECUX1E270JCM	CHIP 25V 27P	1	
C217		ECSF1EE475	TANTALUM 25V 4.7U	1	
C218		ECUX1E270JC	CHIP 25V 27P	1	
C219		ECUX1E270JC	CHIP 25V 27P	1	
C220		ECSF1CE476	TANTALUM 16V 47U	1	
C221		ECUX1E270JCM	CHIP 25V 27P	1	
C222		ECUX1E270JCM	CHIP 25V 27P	1	
C223		ECUX1H682KBN	CHIP 50V 6800P	1	
C224		ECUX1E473FN	CHIP 25V 0.047U	1	
C225		ECUX1E104ZFN	CHIP 25V 0.1U	1	
C226		ECSF1VE475	T.CAPACITOR 35V 4.7U	1	
C227		ECSF1AE106	TANTALUM 10V 10U	1	
C228		ECSF1EE106	T.CAPACITOR 25V 10U	1	
C229		ECSF0JE476	TANTALUM 6.3V 47U	1	
C230		ECUX1E104ZFN	CHIP 25V 0.1U	1	
C231		ECUX1E104ZFN	CHIP 25V 0.1U	1	
C232		ECUX1E104ZFN	CHIP 25V 0.1U	1	
C233		ECUX1E104ZFN	CHIP 25V 0.1U	1	
C236		ECUX1E105JCM	CHIP 25V 1U	1	
C237		ECUX1E104ZFN	CHIP 25V 0.1U	1	
C238		ECUX1E330JCM	CHIP 25V 33P	1	
C239		ECUX1E330JCM	CHIP 25V 33P	1	
C240		ECUX1E330JCM	CHIP 25V 33P	1	
C241		ECUX1E101JCM	CHIP 25V 100P	1	
C242		ECUX1E104ZFN	CHIP 25V 0.1U	1	
C243		ECUX1E104ZFN	CHIP 25V 0.1U	1	
C244		ECUX1E473FN	CHIP 25V 0.047U	1	
C245		ECUX1E104ZFN	CHIP 25V 0.1U	1	
C246		ECUX1E105JCM	CHIP 25V 1U	1	
C247		ECEA1CKK100	E.CAPACITOR 16V 10U	1	
C248		ECUX1E104ZFN	CHIP 25V 0.1U	1	
C249		ECUX1E104ZFN	CHIP 25V 0.1U	1	
C250		ECUX1E104ZFN	CHIP 25V 0.1U	1	
C251		ECUX1E330JCM	CHIP 25V 33P	1	
C252		ECUX1E104ZFN	CHIP 25V 0.1U	1	
			DIODES		
D202		MA141A	DIODE	1	
D204		MA110	DIODE	1	
D205		MA110	DIODE	1	
D207		MA159	DIODE	1	
D209		MA110	DIODE	1	
D210		MA141K	DIODE	1	
			FILTER		
FL201		ELB5B010	FILTER	1	

Ref.No.		Part No.	Part Name & Description	Pcs	Remarks
			INTEGRATED CIRCUITS		
IC201		MN53015XBM	IC	1	
IC202		UPD6147G	IC	1	
			COILS		
L201		VLQ0163K150	COIL 15UH	1	
L202		VLQ0187K150	COIL 15UH	1	
L203		VLQ0187K150	COIL 15UH	1	
L204		VLQ0163K150	COIL 15UH	1	
L205		VLQ0163K150	COIL 15UH	1	
L206		VLQ0163K150	COIL 15UH	1	
L207		VLQ0187K150	COIL 15UH	1	
L210		VLQ0291	COIL	1	
L211		VLQ0291	COIL	1	
L212		VLQ0291	COIL	1	
			TARNSISTORS		
Q201		2SD1819	TRANSISTOR	1	
Q202		2SD1819	TRANSISTOR	1	
Q203		2SD1819	TRANSISTOR	1	
Q204		2SC3930	TRANSISTOR	1	
Q205		2SA1610	TRANSISTOR	1	
Q206		2SC4176	TRANSISTOR	1	
Q207		2SA1610	TRANSISTOR	1	
Q208		2SC4176	TRANSISTOR	1	
Q209		2SA1610	TRANSISTOR	1	
Q210		2SC4176	TRANSISTOR	1	
Q211		2SC3930	TRANSISTOR	1	
			RESISTORS		
R201		ERJ3GEYJ331	CHIP 1/20W 330	1	
R202		ERJ3GEYJ331	CHIP 1/20W 330	1	
R203		ERJ3GEYJ105	CHIP 1/20W 1U	1	
R204		ERJ3GEYJ102	CHIP 1/20W 1K	1	
R205		ERJ3GEYJ333	CHIP 1/20W 33K	1	
R206		ERJ3GEYJ183	CHIP 1/20W 18K	1	
R207		ERJ3GEYJ103	CHIP 1/20W 10K	1	
R208		ERJ3GEYJ471	CHIP 1/20W 470	1	
R209		ERJ3GEYJ473	CHIP 1/20W 47K	1	
R210		ERJ3GEYJ183	CHIP 1/20W 18K	1	
R211		ERJ3GEYJ472	CHIP 1/20W 4.7K	1	
R212		ERJ3GEYJ330	CHIP 1/20W 33	1	
R213		ERJ3GEYJ681	CHIP 1/20W 680	1	
R214		ERJ3GEYJ681	CHIP 1/20W 680	1	
R215		ERJ3GEYJ273	CHIP 1/20W 27K	1	
R216		ERJ3GEYJ103	CHIP 1/20W 10K	1	
R217		ERJ3GEYJ101	CHIP 1/20W 100	1	
R218		ERJ3GEYJ472	CHIP 1/20W 4.7K	1	
R219		ERJ3GEYJ102	CHIP 1/20W 1K	1	
R220		ERJ3GEYJ562	CHIP 1/20W 5.6K	1	
R221		ERJ3GEYJ101	CHIP 1/20W 100	1	
R222		ERJ3GEYJ123	CHIP 1/20W 12K	1	
R223		ERJ3GEYJ221	CHIP 1/20W 220	1	
R224		ERJ3GEYJ221	CHIP 1/20W 220	1	
R225		ERJ3GEYJ102	CHIP 1/20W 1K	1	
R226		ERJ3GEYJ102	CHIP 1/20W 1K	1	
R227		ERJ3GEYJ272	CHIP 1/20W 2.7K	1	
R228		ERJ3GEYJ221	CHIP 1/20W 220	1	
R229		ERJ3GEYJ102	CHIP 1/20W 1K	1	
R230		ERJ3GEYJ105	CHIP 1/20W 1M	1	
R231		ERJ3GEYJ104	CHIP 1/20W 100K	1	
R232		ERJ3GEYJ101	CHIP 1/20W 100	1	
R233		ERJ3GEYJ101	CHIP 1/20W 100	1	
R234		ERJ3GEYJ272	CHIP 1/20W 2.7K	1	
R235		ERJ3GEYJ104	CHIP 1/20W 100K	1	
R236		ERJ3GEYJ270	CHIP 1/20W 27	1	

Ref.No.		Part No.	Part Name & Description	Pcs	Remarks
			VARIABLE RESISTORS		
VR201		EVM7YSX00B25	V.RESISTOR 200K	1	
VR202		EVM7YSW00B54	V.RESISTOR 50K	1	
			CRISTAL OSCILLATOR		
X201		VSX0240	CRISTAL OSCILLATOR	1	
	■	VEP22074A	C.D.S. PACK C.B.A.		
			CAPACITORS		
C501		ECUX1E180JCM	CHIP 25V 18P	1	
C502		ECUX1E473FN	CHIP 25V 0.047U	1	
C503		ECUX1E180JCM	CHIP 25V 18P	1	
C504		ECST1DC685Z	T.CAPACITOR 20V 6.8U	1	
C506		ECUX1E180JCM	CHIP 25V 18P	1	
C507		ECST1AC106Z	T.CAPACITOR 10V 10U	1	
			INTEGRATED CIRCUIT		
IC501		AN2010S	IC	1	
			CONNECTOR		
PK501		VJR0365	CONNECTOR	1	
			RESISTOR		
R501		ERJ3GEYJ102	CHIP 1/20W 1K	1	
	■	VEP23064B	PROCESS C.B.A.		
			CONNECTORS		
B301		VJS2227	CONNECTOR	1	
B302		VJS1948	CONNECTOR	1	
FP301		VJS2137	CONNECTOR	1	
			CAPACITORS		
C101		ECEA0JKS470	E.CAPACITOR 6.3V 47U	1	
C102		ECEA0JKS470	E.CAPACITOR 6.3V 47U	1	
C103		ECEA0JKS470	E.CAPACITOR 6.3V 47U	1	
C104		ECUX1E473FN	CHIP 25V 0.047U	1	
C105		ECUX1E473FN	CHIP 25V 0.047U	1	
C106		ECUX1E473FN	CHIP 25V 0.047U	1	
C107		ECUM1C224ZFN	CHIP 16V 0.22U	1	
C108		ECUM1C224ZFN	CHIP 16V 0.22U	1	
C109		ECST1CY105Z	T.CAPACITOR 16V 1U	1	
C110		ECEA0JKS330I	E.CAPACITOR 6.3V 33U	1	
C111		ECUX1E103ZFM	CHIP 25V 0.01U	1	

Ref.No.		Part No.	Part Name & Description			Pcs	Remarks
C112		ECST1CY105Z	T.CAPACITOR	16V	1U	1	
C113		ECUX1E104ZFN	CHIP	25V	0.1U	1	
C114		ECUX1E104ZFN	CHIP	25V	0.1U	1	
C115		ECUM1H821KBV	CHIP	50V	820P	1	
C116		ECUM1H821KBV	CHIP	50V	820P	1	
C117		ECUM1H821KBV	CHIP	50V	820P	1	
C118		ECEA1AKK100	E.CAPACITOR	10V	10U	1	
C119		ECEA1ASN100	E.CAPACITOR	10V	10U	1	
C120		ECEA1ASN100	E.CAPACITOR	10V	10U	1	
C123		ECEA1CKS100	E.CAPACITOR	16V	10U	1	
C124		ECST1CY105Z	T.CAPACITOR	16V	1U	1	
C125		ECEA1CKS100	E.CAPACITOR	16V	10U	1	
C126		ECKF1H102KB	C.CAPACITOR	50V	1000P	1	
C301		ECUX1E104ZFN	CHIP	25V	0.1U	1	
C302		ECUX1E105JCM	CHIP	25V	1U	1	
C303		ECSF1CE105	TANTALUM	16V	1U	1	
C304		ECEA1CKS100	E.CAPACITOR	16V	10U	1	
C305		ECEA1CSN4R7	E.CAPACITOR	16V	4.7U	1	
C306		ECEA1AKK100	E.CAPACITOR	10V	10U	1	
C307		ECEA1VSN2R2	E.CAPACITOR	35V	2.2U	1	
C308		ECUX1E102KBM	CHIP	25V	1000P	1	
C309		ECSF1CE106	TANTALUM	16V	10U	1	
C310		ECUX1E104ZFN	CHIP	25V	0.1U	1	
C311		ECUX1E104ZFN	CHIP	25V	0.1U	1	
C312		ECUM1H561JCV	CHIP	50V	560P	1	
C313		ECUM1C224ZFN	CHIP	16V	0.22U	1	
C314		ECUX1E103ZFM	CHIP	25V	0.01U	1	
C315		ECUM1C224ZFN	CHIP	16V	0.22U	1	
C316		ECEA1CKK100	E.CAPACITOR	16V	10U	1	
C319		ECUX1E473FN	CHIP	25V	0.047U	1	
C320		ECUX1E473FN	CHIP	25V	0.047U	1	
C321		ECUX1E103ZFM	CHIP	25V	0.01U	1	
C322		ECUX1E103ZFM	CHIP	25V	0.01U	1	
C323		ECUX1E473FN	CHIP	25V	0.047U	1	
C324		ECUX1E473FN	CHIP	25V	0.047U	1	
C325		ECUX1E103ZFM	CHIP	25V	0.01U	1	
C326		ECUM1C224ZFN	CHIP	16V	0.22U	1	
C327		ECUX1E104ZFN	CHIP	25V	0.1U	1	
C328		ECUX1E473FN	CHIP	25V	0.047U	1	
C329		ECSF1AE226	T.CAPACITOR	10V	22U	1	
C330		ECSF0JE476	TANTALUM	6.3V	47U	1	
C331		ECUM1C224ZFN	CHIP	16V	0.22U	1	
C335		ECUX1E104ZFN	CHIP	25V	0.1U	1	
C336		ECUX1E104ZFN	CHIP	25V	0.1U	1	
C337		ECUX1E104ZFN	CHIP	25V	0.1U	1	
C338		ECUX1E104ZFN	CHIP	25V	0.1U	1	
C340		ECEA1CKS100	E.CAPACITOR	16V	10U	1	
C341		ECEA1EKS100I	E.CAPACITOR	25V	10U	1	
C342		ECSF1AE476	TANTALUM	10V	47U	1	
C344		ECSF1AE106	TANTALUM	10V	10U	1	
C345		ECST1CY105Z	T.CAPACITOR	16V	1U	1	
C346		ECUX1E331KBM	CHIP	25V	330P	1	
C347		ECEA1CU101	E.CAPACITOR	16V	100U	1	
C351		ECSF1AE106	TANTALUM	10V	10U	1	
C352		ECUX1E105JCM	CHIP	25V	1M	1	
C353		ECSF1AE106	TANTALUM	10V	10U	1	
C354		ECSF1CE106	TANTALUM	16V	10U	1	
C355		ECST1AY225Z	T.CAPACITOR	10V	2.2U	1	
C356		ECST1AY225Z	T.CAPACITOR	10V	2.2U	1	
C357		ECUX1E104ZFN	CHIP	25V	0.1U	1	
C358		ECUX1E104ZFN	CHIP	25V	0.1U	1	
C359		ECUX1E104ZFN	CHIP	25V	0.1U	1	
C360		ECEA0JKS470	E.CAPACITOR	6.3V	47U	1	
C361		ECUX1E104ZFN	CHIP	25V	0.1U	1	
C362		ECUX1E101JCM	CHIP	25V	100P	1	
C363		ECUM1H151JCV	CHIP	50V	150P	1	
C370		ECUX1E102KBM	CHIP	25V	1000P	1	
C371		ECUX1E103ZFM	CHIP	25V	0.01U	1	
C372		ECUX1E103ZFM	CHIP	25V	0.01U	1	
C373		ECUX1E101JCM	CHIP	25V	100P	1	
C376		ECSF1AE685	T.CAPACITOR	10V	6.8U	1	
C377		ECSF1AE685	T.CAPACITOR	10V	6.8U	1	
C378		ECUX1E101JCM	CHIP	25V	100P	1	
C379		ECUX1E101JCM	CHIP	25V	100P	1	
C381		ECUX1E101JCM	CHIP	25V	100P	1	

Ref.No.		Part No.	Part Name & Description			Pcs	Remarks
C382		ECUX1E101JCM	CHIP	25V	100P	1	
C383		ECUX1E101JCM	CHIP	25V	100P	1	
C384		ECUX1E104ZFN	CHIP	25V	0.1U	1	
			DIODES				
D101		MA713	DIODE			1	
D104		MA728	DIODE			1	
D105		MA713	DIODE			1	
D301		MA141WA	DIODE			1	
D302		MA3047M	DIODE			1	
D303		MA728	DIODE			1	
D304		MA141K	DIODE			1	
D305		MA141WK	DIODE			1	
D306		MA141K	DIODE			1	
D308		MA728	DIODE			1	
			FILTERS				
FL301		ELB5B009	FILTER			1	
FL303		ELB4A002	FILTER			1	
FL304		ELB4A002	FILTER			1	
FL305		VLF0610	FILTER			1	
FL306		ELB4E004	FILTER			1	
FL307		ELB4A003	FILTER			1	
FL309		ELB4B003	FILTER			1	
FL310		ELB4B001	FILTER			1	
FL311		ELB4B002	FILTER			1	
FP101		VJS2282	CONNECTOR			1	
			INTEGRATED CIRCUITS				
IC101		AN1324NS	IC			1	
IC102		AN1324NS	IC			1	
IC103		AN1358S	IC			1	
IC104		AN1358S	IC			1	
IC105		AN1358S	IC			1	
IC301		AN1358S	IC			1	
IC302		AN1358S	IC			1	
IC303		AN1358S	IC			1	
IC304		AN2153S	IC			1	
IC305		MN4052BS	IC			1	
IC306		AN1324NS	IC			1	
IC307		UPD9313GB	IC			1	
IC308		VCR0200	IC			1	
IC309		MC08181A	IC			1	
IC310		VCR0199	IC			1	
			COILS				
L301		VLQ0163K150	COIL		15UH	1	
L302		VLQ0163K150	COIL		15UH	1	
L303		VLQ0163K150	COIL		15UH	1	
L304		VLQ0163K150	COIL		15UH	1	
L306		VLQ0163K330	COIL		33UH	1	
L308		VLQ0163K150	COIL		15UH	1	
L311		VLQ0163K150	COIL		15UH	1	
L312		VLQ0163K150	COIL		15UH	1	
L313		VLQ0163K150	COIL		15UH	1	
L315		VLQ0291	COIL			1	
			TRANSISTORS				
Q301		2SD1819	TRANSISTOR			1	
Q302		2SD1819	TRANSISTOR			1	
Q303		2SD1819	TRANSISTOR			1	
Q304		2SB1218	TRANSISTOR			1	
Q305		2SB1218	TRANSISTOR			1	
Q306		2SB1218	TRANSISTOR			1	
Q307		2SD1819	TRANSISTOR			1	
Q308		2SB1218	TRANSISTOR			1	
Q311		2SD1819	TRANSISTOR			1	
Q314		2SD1819	TRANSISTOR			1	
Q315		2SD1819	TRANSISTOR			1	
Q316		2SC3931	TRANSISTOR			1	

Ref.No.		Part No.	Part Name & Description	Pcs	Remarks
Q318		2SB1218	TRANSISTOR	1	
Q319		2SB1219	TRANSISTOR	1	
Q320		2SD1819	TRANSISTOR	1	
Q321		2SD1819	TRANSISTOR	1	
Q322		2SB1219	TRANSISTOR	1	
Q323		2SD874	TRANSISTOR	1	
Q324		2SD1819	TRANSISTOR	1	
Q325		2SD1819	TRANSISTOR	1	
Q327		2SD1819	TRANSISTOR	1	
Q328		2SC3931	TRANSISTOR	1	
Q330		2SD1819	TRANSISTOR	1	
Q331		2SB970	TRANSISTOR	1	
Q332		2SD1819	TRANSISTOR	1	
Q339		2SD1819	TRANSISTOR	1	
Q340		2SK316	TRANSISTOR	1	
Q344		2SB1218	TRANSISTOR	1	
Q345		2SD1819	TRANSISTOR	1	
Q346		2SB1218	TRANSISTOR	1	
Q347		2SB1218	TRANSISTOR	1	
Q348		2SK316	TRANSISTOR	1	
Q350		2SB1218	TRANSISTOR	1	
Q351		2SD1819	TRANSISTOR	1	
Q353		2SC3931	TRANSISTOR	1	
QR302		UN5215	TRANSISTOR-RESISTOR	1	
			RESISTORS		
R101		ERJ3GEYJ561	CHIP 1/20W 560	1	
R102		ERJ3GEYJ561	CHIP 1/20W 560	1	
R103		ERJ3GEYJ682	CHIP 1/20W 6.8K	1	
R104		ERJ3GEYJ153	CHIP 1/20W 15K	1	
R105		ERJ3GEYJ682	CHIP 1/20W 6.8K	1	
R107		ERJ3GEYJ103	CHIP 1/20W 10K	1	
R109		ERJ3GEYJ153	CHIP 1/20W 15K	1	
R110		ERJ3GEYJ333	CHIP 1/20W 33K	1	
R111		ERJ3GEYJ333	CHIP 1/20W 33K	1	
R112		ERJ3GEYJ333	CHIP 1/20W 33K	1	
R113		ERJ3GEYJ333	CHIP 1/20W 33K	1	
R114		ERJ3GEYJ103	CHIP 1/20W 10K	1	
R116		ERJ3GEYJ102	CHIP 1/20W 1K	1	
R117		ERJ3GEYJ153	CHIP 1/20W 15K	1	
R118		ERJ3GEYJ223	CHIP 1/20W 22K	1	
R119		ERJ3GEYJ822	CHIP 1/20W 8.2K	1	
R120		ERJ3GEYJ470	CHIP 1/20W 47	1	
R121		ERJ3GEYJ823	CHIP 1/20W 82K	1	
R122		ERJ3GEYJ223	CHIP 1/20W 22K	1	
R123		ERJ3GEYJ123	CHIP 1/20W 12K	1	
R124		ERJ3GEYJ103	CHIP 1/20W 10K	1	
R125		ERJ3GEYJ103	CHIP 1/20W 10K	1	
R126		ERJ3GEYJ103	CHIP 1/20W 10K	1	
R127		ERJ3GEYJ104	CHIP 1/20W 100K	1	
R128		ERJ3GEYJ104	CHIP 1/20W 100K	1	
R129		ERJ3GEYJ104	CHIP 1/20W 100K	1	
R130		ERJ3GEYJ104	CHIP 1/20W 100K	1	
R131		ERJ3GEYJ224	CHIP 1/20W 220K	1	
R132		ERJ3GEYJ104	CHIP 1/20W 100K	1	
R133		ERJ3GEYJ224	CHIP 1/20W 220K	1	
R134		ERJ3GEYJ123	CHIP 1/20W 12K	1	
R143		ERJ3GEYJ333	CHIP 1/20W 33K	1	
R144		ERJ3GEYJ682	CHIP 1/20W 6.8K	1	
R145		ERJ3GEYJ102	CHIP 1/20W 1K	1	
R146		ERJ3GEYJ102	CHIP 1/20W 1K	1	
R147		ERJ3GEYJ562	CHIP 1/20W 5.6K	1	
R148		ERJ3GEYJ102	CHIP 1/20W 1K	1	
R149		ERJ3GEYJ183	CHIP 1/20W 18K	1	
R150		ERJ3GEYJ102	CHIP 1/20W 1K	1	
R151		ERJ3GEYJ102	CHIP 1/20W 1K	1	
R152		ERJ3GEYJ102	CHIP 1/20W 1K	1	
R153		ERJ3GEYOR00	CHIP 1/20W 0	1	
R154		ERJ3GEYJ393	CHIP 1/20W 39K	1	
R155		ERJ3GEYJ183	CHIP 1/20W 18K	1	
R156		ERJ3GEYJ182	CHIP 1/20W 1.8K	1	
R157		ERJ3GEYJ182	CHIP 1/20W 1.8K	1	

Ref.No.		Part No.	Part Name & Description	Pcs	Remarks
R158		ERJ3GEYJ682	CHIP 1/20W 6.8K	1	
R160		ERJ3GEYJ334	CHIP 1/20W 330K	1	
R161		ERJ3GEYJ182	CHIP 1/20W 1.8K	1	
R162		ERJ3GEYJ273	CHIP 1/20W 27K	1	
R198		ERJ3GEYJ562	CHIP 1/20W 5.6K	1	
R302		ERJ3GEYJ273	CHIP 1/20W 27K	1	
R304		ERJ3GEYJ104	CHIP 1/20W 100K	1	
R306		ERJ3GEYJ823	CHIP 1/20W 82K	1	
R307		ERJ3GEYJ392	CHIP 1/20W 3.9K	1	
R308		ERJ3GEYJ274	CHIP 1/20W 270K	1	
R309		ERJ3GEYJ562	CHIP 1/20W 5.6K	1	
R310		ERJ3GEYJ105	CHIP 1/20W 1M	1	
R311		ERJ3GEYJ123	CHIP 1/20W 12K	1	
R312		ERJ3GEYJ563	CHIP 1/20W 56K	1	
R313		ERJ3GEYJ472	CHIP 1/20W 4.7K	1	
R314		ERJ3GEYJ823	CHIP 1/20W 82K	1	
R315		ERJ3GEYJ152	CHIP 1/20W 1.5K	1	
R316		ERJ3GEYJ104	CHIP 1/20W 100K	1	
R317		ERJ3GEYJ222	CHIP 1/20W 2.2K	1	
R318		ERJ3GEYJ473	CHIP 1/20W 47K	1	
R319		ERJ3GEYJ103	CHIP 1/20W 10K	1	
R320		ERJ3GEYJ103	CHIP 1/20W 10K	1	
R321		ERJ3GEYJ103	CHIP 1/20W 10K	1	
R322		ERJ3GEYJ103	CHIP 1/20W 10K	1	
R323		ERJ3GEYJ473	CHIP 1/20W 47K	1	
R324		ERJ3GEYJ562	CHIP 1/20W 5.6K	1	
R325		ERJ3GEYJ562	CHIP 1/20W 5.6K	1	
R326		ERJ3GEYJ104	CHIP 1/20W 100K	1	
R327		ERJ3GEYJ154	CHIP 1/20W 150K	1	
R328		ERJ3GEYJ123	CHIP 1/20W 12K	1	
R329		ERJ3GEYJ332	CHIP 1/20W 3.3K	1	
R330		ERJ3GEYJ183	CHIP 1/20W 18K	1	
R331		ERJ3GEYJ562	CHIP 1/20W 5.6K	1	
R332		ERJ3GEYJ102	CHIP 1/20W 1K	1	
R333		ERJ3GEYJ472	CHIP 1/20W 4.7K	1	
R334		ERJ3GEYJ102	CHIP 1/20W 1K	1	
R335		ERJ3GEYJ153	CHIP 1/20W 15K	1	
R336		ERJ3GEYJ822	CHIP 1/20W 8.2K	1	
R337		ERJ3GEYJ182	CHIP 1/20W 1.8K	1	
R338		ERJ3GEYJ103	CHIP 1/20W 10K	1	
R339		ERJ3GEYJ223	CHIP 1/20W 22K	1	
R340		ERJ3GEYJ223	CHIP 1/20W 22K	1	
R341		ERJ3GEYJ562	CHIP 1/20W 5.6K	1	
R342		ERJ3GEYJ103	CHIP 1/20W 10K	1	
R343		ERJ3GEYJ103	CHIP 1/20W 10K	1	
R346		ERJ3GEYJ152	CHIP 1/20W 1.5K	1	
R347		ERJ3GEYJ393	CHIP 1/20W 39K	1	
R348		ERJ3GEYJ183	CHIP 1/20W 18K	1	
R349		ERJ3GEYJ332	CHIP 1/20W 3.3K	1	
R350		ERJ3GEYJ183	CHIP 1/20W 18K	1	
R351		ERJ3GEYJ103	CHIP 1/20W 10K	1	
R352		ERJ3GEYJ103	CHIP 1/20W 10K	1	
R353		ERJ3GEYJ103	CHIP 1/20W 10K	1	
R354		ERJ3GEYJ102	CHIP 1/20W 1K	1	
R355		ERJ3GEYJ224	CHIP 1/20W 220K	1	
R356		ERJ3GEYJ824	CHIP 1/20W 820K	1	
R357		ERJ3GEYJ103	CHIP 1/20W 10K	1	
R358		ERJ3GEYJ183	CHIP 1/20W 18K	1	
R359		ERJ3GEYJ153	CHIP 1/20W 15K	1	
R362		ERJ3GEYJ472	CHIP 1/20W 4.7K	1	
R363		ERJ3GEYJ102	CHIP 1/20W 1K	1	
R366		ERJ3GEYJ273	CHIP 1/20W 27K	1	
R367		ERJ3GEYJ273	CHIP 1/20W 27K	1	
R368		ERJ3GEYJ273	CHIP 1/20W 27K	1	
R371		ERJ3GEYJ102	CHIP 1/20W 1K	1	
R372		ERJ6GEYK106	CHIP 1/16W 10M	1	
R373		ERJ3GEYJ563	CHIP 1/20W 56K	1	
R374		ERJ3GEYJ274	CHIP 1/20W 270K	1	
R375		ERJ3GEYJ334	CHIP 1/20W 330K	1	
R376		ERJ3GEYJ105	CHIP 1/20W 1M	1	
R377		ERJ3GEYJ563	CHIP 1/20W 56K	1	
R378		ERJ3GEYJ105	CHIP 1/20W 1M	1	
R379		ERJ3GEYJ334	CHIP 1/20W 330K	1	
R380		ERJ3GEYJ274	CHIP 1/20W 270K	1	
R381		ERJ3GEYJ563	CHIP 1/20W 56K	1	

Ref.No.		Part No.	Part Name & Description	Pcs	Remarks
R382		ERJ3GEYJ563	CHIP 1/20W 56K	1	
R383		ERJ6GEYK106	CHIP 1/16W 10M	1	
R384		ERJ3GEYJ564	CHIP 1/20W 560K	1	
R385		ERJ3GEYJ154	CHIP 1/20W 150K	1	
R386		ERJ3GEYJ124	CHIP 1/20W 120K	1	
R387		ERJ3GEYJ473	CHIP 1/20W 47K	1	
R388		ERJ3GEYJ124	CHIP 1/20W 120K	1	
R389		ERJ3GEYJ333	CHIP 1/20W 33K	1	
R390		ERJ3GEYJ184	CHIP 1/20W 180K	1	
R391		ERJ3GEYJ562	CHIP 1/20W 5.6K	1	
R392		ERJ3GEYJ473	CHIP 1/20W 47K	1	
R393		ERJ3GEYJ562	CHIP 1/20W 5.6K	1	
R394		ERJ3GEYJ102	CHIP 1/20W 1K	1	
R395		ERJ3GEYJ102	CHIP 1/20W 1K	1	
R396		ERJ3GEYJ333	CHIP 1/20W 33K	1	
R397		ERJ3GEYJ103	CHIP 1/20W 10K	1	
R398		ERJ3GEYJ222	CHIP 1/20W 2.2K	1	
R399		ERJ3GEYJ181	CHIP 1/20W 180K	1	
R401		ERJ3GEYJ681	CHIP 1/20W 680K	1	
R402		ERJ3GEYJ102	CHIP 1/20W 1K	1	
R403		ERJ3GEY0R00	CHIP 1/20W 0	1	
R404		ERJ3GEYJ332	CHIP 1/20W 3.3K	1	
R405		ERJ3GEYJ473	CHIP 1/20W 47K	1	
R406		ERJ3GEYJ223	CHIP 1/20W 22K	1	
R407		ERJ3GEYJ561	CHIP 1/20W 560	1	
R408		ERJ3GEYJ561	CHIP 1/20W 560	1	
R409		ERJ3GEYJ103	CHIP 1/20W 10K	1	
R410		ERJ3GEYJ102	CHIP 1/20W 1K	1	
R411		ERJ3GEYJ183	CHIP 1/20W 18K	1	
R412		ERJ3GEYJ222	CHIP 1/20W 2.2K	1	
R415		ERJ3GEYJ472	CHIP 1/20W 4.7K	1	
R416		ERJ3GEYJ472	CHIP 1/20W 4.7K	1	
R417		ERJ3GEYJ332	CHIP 1/20W 3.3K	1	
R418		ERJ3GEYG682	CHIP 1/20W 6.8K	1	
R419		ERJ3GEYJ473	CHIP 1/20W 4.7K	1	
R420		ERJ3GEYJ103	CHIP 1/20W 10K	1	
R421		ERJ3GEYJ103	CHIP 1/20W 10K	1	
R422		ERJ3GEYJ472	CHIP 1/20W 4.7K	1	
R423		ERJ3GEYJ102	CHIP 1/20W 1K	1	
R424		ERJ3GEYJ102	CHIP 1/20W 1K	1	
R425		ERJ3GEYJ472	CHIP 1/20W 4.7K	1	
R426		ERJ3GEYJ563	CHIP 1/20W 56K	1	
R427		ERJ3GEY0R00	CHIP 1/20W 0	1	
R428		ERJ3GEYJ683	CHIP 1/20W 68K	1	
R429		ERJ3GEYJ104	CHIP 1/20W 100K	1	
R430		ERJ3GEYJ102	CHIP 1/20W 1K	1	
R431		ERJ3GEYJ104	CHIP 1/20W 100K	1	
R432		ERJ3GEYJ562	CHIP 1/20W 5.6K	1	
R433		ERJ3GEYJ562	CHIP 1/20W 5.6K	1	
R434		ERJ3GEYJ102	CHIP 1/20W 1K	1	
R435		ERJ3GEYJ153	CHIP 1/20W 15K	1	
R436		ERJ3GEYJ822	CHIP 1/20W 8.2K	1	
R437		ERJ3GEYJ103	CHIP 1/20W 10K	1	
R438		ERJ3GEYJ561	CHIP 1/20W 560	1	
R439		ERJ3GEYJ392	CHIP 1/20W 3.9K	1	
R440		ERJ3GEYJ331	CHIP 1/20W 330	1	
R441		ERJ3GEYJ472	CHIP 1/20W 4.7K	1	
R442		ERJ3GEYJ391	CHIP 1/20W 390	1	
R443		ERJ3GEYJ222	CHIP 1/20W 2.2K	1	
R444		ERJ3GEYJ222	CHIP 1/20W 2.2K	1	
R445		ERJ3GEYJ102	CHIP 1/20W 1K	1	
R446		ERJ3GEYJ271	CHIP 1/20W 270	1	
R447		ERJ3GEYJ102	CHIP 1/20W 1K	1	
R448		ERJ3GEYJ102	CHIP 1/20W 1K	1	
R449		ERJ3GEYJ102	CHIP 1/20W 1K	1	
R450		ERJ3GEYJ561	CHIP 1/20W 560	1	
R451		ERJ3GEYJ222	CHIP 1/20W 2.2K	1	
R453		ERJ3GEY0R00	CHIP 1/20W 0	1	
R459		ERJ3GEYJ123	CHIP 1/20W 12K	1	
R460		ERJ3GEYJ822	CHIP 1/20W 8.2K	1	
R461		ERJ3GEYJ122	CHIP 1/20W 1.2K	1	
R462		ERJ3GEYJ472	CHIP 1/20W 4.7K	1	
R464		ERJ3GEY0R00	CHIP 1/20W 0	1	
R466		ERJ3GEYJ103	CHIP 1/20W 10K	1	
R467		ERJ3GEYJ103	CHIP 1/20W 10K	1	

Ref.No.		Part No.	Part Name & Description	Pcs	Remarks
R468		ERJ3GEYJ333	CHIP 1/20W 33K	1	
R469		ERJ3GEYJ123	CHIP 1/20W 12K	1	
R471		ERJ3GEYJ392	CHIP 1/20W 3.9K	1	
R472		ERJ3GEYJ222	CHIP 1/20W 2.2K	1	
R473		ERJ3GEYJ332	CHIP 1/20W 3.3K	1	
R474		ERJ3GEYJ564	CHIP 1/20W 560K	1	
R476		ERJ3GEYJ562	CHIP 1/20W 5.6K	1	
R477		ERJ3GEYJ392	CHIP 1/20W 3.9K	1	
R478		ERJ3GEYJ223	CHIP 1/20W 22K	1	
R479		ERJ3GEYJ103	CHIP 1/20W 10K	1	
R480		ERJ3GEYJ472	CHIP 1/20W 4.7K	1	
R481		ERJ3GEYJ822	CHIP 1/20W 8.2K	1	
R482		ERJ3GEYJ563	CHIP 1/20W 56K	1	
R483		ERJ3GEYJ333	CHIP 1/20W 33K	1	
R485		ERJ3GEYJ222	CHIP 1/20W 2.2K	1	
R486		ERJ3GEYJ102	CHIP 1/20W 1K	1	
R487		ERJ3GEYJ102	CHIP 1/20W 1K	1	
R490		ERJ6GEY0R00	CHIP 1/16W 0	1	
R495		ERJ3GEYJ105	CHIP 1/20W 1M	1	
R496		ERJ3GEYJ473	CHIP 1/20W 47K	1	
			THERMISTORS		
TH101		VRE0023	THERMISTOR	1	
TH102		VRE0023	THERMISTOR	1	
TH103		VRE0023	THERMISTOR	1	
TH104		VRE0023	THERMISTOR	1	
TH301		ERTD2FHK802	THERMISTOR	1	
			VARIABLE RESISTORS		
VR101		EVM7YSX00B14	V.RESISTOR 10K	1	
VR102		EVM7YSX00B14	V.RESISTOR 10K	1	
VR103		EVM7YSX00B54	V.RESISTOR 50K	1	
VR104		EVM7YSW00B25	V.RESISTOR 200K	1	
VR105		EVM7YSX00B14	V.RESISTOR 10K	1	
VR106		EVM7YSX00B14	V.RESISTOR 10K	1	
VR107		EVM7YSX00B24	V.RESISTOR 20K	1	
VR301		EVM7YSW00B14	V.RESISTOR 10K	1	
VR302		EVM7YSX00B13	V.RESISTOR 1K	1	
VR303		EVM7YSW00B14	V.RESISTOR 10K	1	
VR304		EVM7YSX00B13	V.RESISTOR 1K	1	
VR305		EVM7YSX00B23	V.RESISTOR 2K	1	
VR306		EVM7YSW00B14	V.RESISTOR 10K	1	
VR308		EVM7YSW00B55	V.RESISTOR 500K	1	
VR312		EVM7YSW00B14	V.RESISTOR 10K	1	
VR313		EVM7YSW00B14	V.RESISTOR 10K	1	
VR314		EVM7YSX00B54	V.RESISTOR 50K	1	
VR315		EVM7YSW00B54	V.RESISTOR 50K	1	
VR316		EVM7YSW00B13	V.RESISTOR 1K	1	
VR317		EVM7YSW00B13	V.RESISTOR 1K	1	
VR318		EVM7YSX00B24	V.RESISTOR 20K	1	
VR319		EVM7YSX00B24	V.RESISTOR 20K	1	
VR322		EVM7YSW00B14	V.RESISTOR 10K	1	
VR323		EVM7YSW00B14	V.RESISTOR 10K	1	
VR324		EVM7YSW00B14	V.RESISTOR 10K	1	
VR325		EVM7YSW00B34	V.RESISTOR 30K	1	
			MISCELLANEOUS		
		VWJ0305	14PIN FLEXIBLE CABLE	1	
	■	VEP23061B	ENCODER PACK D.B.A.		
			CAPACITORS		

Ref.No.		Part No.	Part Name & Description			Pcs	Remarks
C901		ECST1CY105Z	T.CAPACITOR	16V	1U	1	
C903		ECUM1C224ZFN	CHIP	16V	0.22U	1	
C904		ECST1AC106Z	T.CAPACITOR	10V	10U	1	
C905		ECUX1E330JCM	CHIP	25V	33P	1	
C906		ECUX1E102KBM	CHIP	25V	1000P	1	
C907		ECUX1E102KBM	CHIP	25V	1000P	1	
C908		ECUX1E104ZFN	CHIP	25V	0.1U	1	
C909		ECST1AC106Z	T.CAPACITOR	10V	10U	1	
C910		ECUX1E104ZFN	CHIP	25V	0.1U	1	
C911		ECUM1C224ZFN	CHIP	16V	0.22U	1	
C912		ECUX1H103ZFN	CHIP	50V	0.01U	1	
			INTEGRATED CIRCUITS				
IC901		AN2253FA	IC			1	
			COIL				
L901		VLQ0163K330	COIL		33UH	1	
			CONNECTORS				
PK901		VJR0367	CONNECTOR			1	
PK902		VJR0367	CONNECTOR			1	
			TRANSISTORS				
Q901		2SA1532	TRANSISTOR			1	
Q902		2SB1218	TRANSISTOR			1	
			RESISTORS				
R901		ERJ3GEYJ223	CHIP	1/20W	22K	1	
R902		ERJ3GEYJ273	CHIP	1/20W	27K	1	
R903		ERJ3GEYJ102	CHIP	1/20W	1K	1	
R904		ERJ3GEYJ274	CHIP	1/20W	270K	1	
R905		ERJ3GEY0R00	CHIP	1/20W	0	1	
R907		ERJ3GEYJ393	CHIP	1/20W	39K	1	
R908		ERJ3GEYJ153	CHIP	1/20W	15K	1	
R909		ERJ3GEYJ223	CHIP	1/20W	22K	1	
R910		ERJ3GEYJ273	CHIP	1/20W	27K	1	
R911		ERJ3GEYJ333	CHIP	1/20W	33K	1	
R912		ERJ3GEYJ103	CHIP	1/20W	10K	1	
R913		ERJ3GEYJ102	CHIP	1/20W	1K	1	
R914		ERJ3GEYJ182	CHIP	1/20W	1.8K	1	
R915		ERJ3GEYJ560	CHIP	1/20W	56K	1	
R916		ERJ3GEYJ222	CHIP	1/20W	2.2K	1	
R917		ERJ3GEYJ103	CHIP	1/20W	10K	1	
R918		ERJ3GEYG112	CHIP	1/20W	1.1K	1	
R919		ERJ3GEYJ333	CHIP	1/20W	33K	1	
R921		ERJ3GEYJ333	CHIP	1/20W	33K	1	
R923		ERJ3GEYJ102	CHIP	1/20W	1K	1	
	■	VEP28015B	AUTO FOCUS C.B.A.				
			CAPACITORS				
C601		ECEA0JU471	E.CAPACITOR	6.3V	470U	1	
C602		ECUX1E270JCM	CHIP	25V	27P	1	
C603		ECUX1E330JCM	CHIP	25V	33P	1	
C604		ECUX1E330JCM	CHIP	25V	33P	1	
C605		ECUX1E103ZFM	CHIP	25V	0.01U	1	
C606		ECUX1E103ZFM	CHIP	25V	0.01U	1	
C607		ECUX1E103ZFM	CHIP	25V	0.01U	1	
C608		ECUX1E101JCM	CHIP	25V	0.01U	1	

Ref.No.		Part No.	Part Name & Description			Pcs	Remarks
C609		ECUX1E101JCM	CHIP	25V	100P	1	
C610		ECUX1E101JCM	CHIP	25V	100P	1	
C611		ECUX1E101JCM	CHIP	25V	100P	1	
C612		ECUM1C224ZFN	CHIP	16V	0.22U	1	
C613		ECUX1E473KB	CHIP	25V	0.047U	1	
C614		ECUM1E473KB	CHIP	25V	0.047U	1	
C615		ECUX1E104ZFN	CHIP	25V	0.1U	1	
C616		ECEA0JKS101I	E.CAPACITOR	6.3V	100U	1	
C617		ECEA0JKS101I	E.CAPACITOR	6.3V	100U	1	
C618		ECEA1CKS100	E.CAPACITOR	16V	10U	1	
C619		ECEA1CKS100	E.CAPACITOR	16V	10U	1	
C620		ECEA1CKS100	E.CAPACITOR	16V	10U	1	
C621		ECRJA020E12X	TRIMMER			1	
C622		ECUX1H391KBM	CHIP	50V	390P	1	
C623		ECUX1E104ZFN	CHIP	25V	0.1U	1	
C624		ECUM1C224ZFN	CHIP	16V	0.22U	1	
C625		ECUM1C224ZFN	CHIP	16V	0.22U	1	
C626		ECUX1E104ZFN	CHIP	25V	0.1U	1	
C627		ECUX1E473FN	CHIP	25V	0.047U	1	
C628		ECUX1E273KBN	CHIP	25V	0.027U	1	
C629		ECUX1E273KBN	CHIP	25V	0.027U	1	
C630		ECUM1E683ZFN	CHIP	25V	0.063U	1	
C631		ECUX1E273KBN	CHIP	25V	0.027U	1	
C632		ECUX1E104ZFN	CHIP	25V	0.1U	1	
C633		ECUX1E223KBN	CHIP	25V	0.023U	1	
C634		ECEA0JSN220	E.CAPACITOR	6.3V	22U	1	
C635		ECUM1C224ZFN	CHIP	16V	0.22U	1	
C636		ECUX1E104ZFN	CHIP	25V	0.1U	1	
C637		ECUX1E473FN	CHIP	25V	0.047U	1	
C638		ECUM1C224ZFN	CHIP	16V	0.22U	1	
C639		ECUM1C224ZFN	CHIP	16V	0.22U	1	
C640		ECUM1H100DCV	CHIP	50V	10P	1	
C641		ECEA1CKS100	E.CAPACITOR	16V	10U	1	
C642		ECEA1CKS100	E.CAPACITOR	16V	10U	1	
C645		ECEA0JKS470	E.CAPACITOR	6.3V	47U	1	
C646		ECEA1HKS010	E.CAPACITOR	50V	1U	1	
C648		ECEA1CKS100	E.CAPACITOR	16V	10U	1	
C649		ECUM1H333KB	CHIP	50V	0.033U	1	
C650		ECUM1H333KB	CHIP	50V	0.033U	1	
C651		ECUX1E103ZFM	CHIP	25V	0.01U	1	
C652		ECEA0JKS101I	E.CAPACITOR	6.3V	100U	1	
C653		ECEA1CU100	E.CAPACITOR	16V	10U	1	
C654		ECEA1CKS100	E.CAPACITOR	16V	10U	1	
C655		ECUX1E104ZFN	CHIP	25V	0.1U	1	
C656		ECRJA020E12W	TRIMMER			1	
C657		ECUX1E104ZFN	CHIP	25V	0.1U	1	
C658		ECEA0JKS470	E.CAPACITOR	6.3V	47U	1	
C659		ECUX1E220JCM	CHIP	25V	22P	1	
C660		ECUX1E104ZFN	CHIP	25V	0.1U	1	
C661		ECUX1H391KBM	CHIP	50V	390P	1	
C663		ECUX1E102JCM	CHIP	25V	1000P	1	
			DIODES				
D602		MA110	DIODE			1	
D603		MA110	DIODE			1	
D604		1SS250	DIODE			1	
D605		1SS250	DIODE			1	
D606		MA110	DIODE			1	
D607		MA110	DIODE			1	
D608		MA110	DIODE			1	
D610		MA153	DIODE			1	
			FILTERS				
FL601		ELB4B004	FILTER			1	
FL602		VLF0595	FILTER			1	
FL603		ELB4B005	FILTER			1	
FL604		ELB4D001	FILTER			1	
FL605		VLF0596	FILTER			1	
			INTEGRATED CIRCUITS				
IC601		MN15865VYV	IC			1	
IC602		AN2583S	IC			1	

Ref.No.		Part No.	Part Name & Description	Pcs	Remarks
IC603		AN78N05	IC	1	
IC604		NJM4558M-P	IC	1	
IC605		AN6562S	IC	1	
IC606		NJM3415M	IC	1	
IC607		MN1280Q	IC	1	
			COILS		
L601		VLQ0300J560	COIL 56UH	1	
L602		VLQ0163K330	COIL 33UH	1	
L603		VLQEL05F101K	COIL 100UH	1	
			CONNECTORS		
B601		VJP2227	CONNECTOR	1	
P601		VJP1599T	CONNECTOR(MALE) 6P	1	
			TRANSISTORS		
Q601		2SD1819	TRANSISTOR	1	
Q602		2SD1819	TRANSISTOR	1	
Q603		2SB710	TRANSISTOR CHIP	1	
Q604		2SB1219	TRANSISTOR	1	
Q605		2SD1820	TRANSISTOR	1	
Q606		2SB1219	TRANSISTOR	1	
Q607		2SD1820	TRANSISTOR	1	
Q608		2SD1819	TRANSISTOR	1	
Q609		2SD1819	TRANSISTOR	1	
Q610		2SD1819	TRANSISTOR	1	
Q611		2SD1819	TRANSISTOR	1	
Q612		2SD1819	TRANSISTOR	1	
Q613		2SA1255	TRANSISTOR	1	
Q614		2SC3138	TRANSISTOR	1	
Q615		2SD1819	TRANSISTOR	1	
Q616		2SB1220	TRANSISTOR	1	(T,S)
Q617		2SB1220	TRANSISTOR	1	(T,S)
Q618		2SD1819	TRANSISTOR	1	
Q619		2SD1819	TRANSISTOR	1	
Q620		2SD1819	TRANSISTOR	1	
Q621		2SD1819	TRANSISTOR	1	
			RESISTORS		
R602		ERJ3GEYJ103	CHIP 1/20W 10K	1	
R603		ERJ3GEYJ103	CHIP 1/20W 10K	1	
R604		ERJ3GEYJ102	CHIP 1/20W 1K	1	
R605		ERJ3GEYJ683	CHIP 1/20W 68K	1	
R606		ERJ3GEYJ103	CHIP 1/20W 10K	1	
R607		ERJ3GEYJ102	CHIP 1/20W 1K	1	
R608		ERJ3GEYJ223	CHIP 1/20W 22K	1	
R609		ERJ3GEYJ563	CHIP 1/20W 56K	1	
R610		ERJ3GEYJ563	CHIP 1/20W 56K	1	
R611		ERJ3GEYJ272	CHIP 1/20W 2.7K	1	
R612		ERJ3GEYJ562	CHIP 1/20W 5.6K	1	
R613		ERJ3GEYJ272	CHIP 1/20W 2.7K	1	
R614		ERJ3GEYJ562	CHIP 1/20W 5.6K	1	
R615		ERJ3GEYJ272	CHIP 1/20W 2.7K	1	
R616		ERJ3GEYJ104	CHIP 1/20W 100K	1	
R617		ERJ3GEYJ104	CHIP 1/20W 100K	1	
R618		ERJ3GEYJ272	CHIP 1/20W 2.7K	1	
R619		ERJ3GEYJ102	CHIP 1/20W 1K	1	
R620		ERJ3GEYJ152	CHIP 1/20W 1.5K	1	
R621		ERJ3GEYJ152	CHIP 1/20W 1.5K	1	
R622		ERJ3GEYJ271	CHIP 1/20W 270	1	
R623		ERJ3GEYJ122	CHIP 1/20W 1.2K	1	
R624		ERJ3GEYJ102	CHIP 1/20W 1K	1	
R625		ERJ3GEYJ562	CHIP 1/20W 5.6K	1	
R626		ERJ3GEYJ102	CHIP 1/20W 1K	1	
R627		ERJ3GEYJ102	CHIP 1/20W 1K	1	
R628		ERJ3GEYJ102	CHIP 1/20W 1K	1	
R629		ERJ3GEYJ102	CHIP 1/20W 1K	1	
R630		ERJ3GEYJ751	CHIP 1/20W 750	1	
R631		ERJ3GEYJ331	CHIP 1/20W 330	1	

Ref.No.		Part No.	Part Name & Description	Pcs	Remarks
R632		ERJ3GEYJ473	CHIP 1/20W 47K	1	
R633		ERJ3GEYJ224	CHIP 1/20W 220K	1	
R634		ERJ3GEYJ224	CHIP 1/20W 220K	1	
R635		ERJ3GEYJ224	CHIP 1/20W 220K	1	
R636		ERJ3GEYJ224	CHIP 1/20W 220K	1	
R637		ERJ3GEYJ394	CHIP 1/20W 390K	1	
R638		ERJ6GEYF333	CHIP 1/16W 33K	1	
R639		ERJ6GEYF473	CHIP 1/16W 47K	1	
R640		ERJ3GEYJ394	CHIP 1/20W 390K	1	
R641		ERJ6GEYF333	CHIP 1/16W 33K	1	
R642		ERJ6GEYF473	CHIP 1/16W 47K	1	
R643		ERJ3GEYJ223	CHIP 1/20W 22K	1	
R644		ERJ3GEYJ223	CHIP 1/20W 22K	1	
R645		ERJ3GEYJ183	CHIP 1/20W 18K	1	
R646		ERJ3GEYJ224	CHIP 1/20W 220K	1	
R647		ERJ3GEYJ124	CHIP 1/20W 120K	1	
R648		ERJ3GEYJ102	CHIP 1/20W 1K	1	
R649		ERJ3GEYJ123	CHIP 1/20W 12K	1	
R650		ERJ3GEYJ123	CHIP 1/20W 12K	1	
R651		ERJ3GEYJ102	CHIP 1/20W 1K	1	
R652		ERJ3GEYJ153	CHIP 1/20W 15K	1	
R653		ERJ3GEYJ682	CHIP 1/20W 6.8K	1	
R654		ERJ3GEYJ562	CHIP 1/20W 5.6K	1	
R655		ERJ3GEYJ562	CHIP 1/20W 5.6K	1	
R656		ERJ3GEYJ220	CHIP 1/20W 22	1	
R657		ERJ3GEYJ103	CHIP 1/20W 10K	1	
R658		ERJ3GEYJ103	CHIP 1/20W 10K	1	
R659		ERJ3GEYJ105	CHIP 1/20W 1M	1	
R660		ERJ3GEYJ104	CHIP 1/20W 100K	1	
R661		ERJ3GEYJ104	CHIP 1/20W 100K	1	
R662		ERJ3GEYJ104	CHIP 1/20W 100K	1	
R663		ERJ3GEYJ104	CHIP 1/20W 100K	1	
R664		ERJ3GEYJ104	CHIP 1/20W 100K	1	
R665		ERJ3GEYJ103	CHIP 1/20W 10K	1	
R666		ERJ3GEYJ103	CHIP 1/20W 10K	1	
R667		ERJ3GEYJ223	CHIP 1/20W 22K	1	
R668		ERJ3GEYJ222	CHIP 1/20W 2.2K	1	
R669		ERJ3GEYJ103	CHIP 1/20W 10K	1	
R670		ERJ3GEYJ103	CHIP 1/20W 10K	1	
R671		ERJ3GEYJ223	CHIP 1/20W 22K	1	
R672		ERJ3GEYJ223	CHIP 1/20W 22K	1	
R673		ERJ3GEYJ332	CHIP 1/20W 3.3K	1	
R674		ERJ3GEYJ332	CHIP 1/20W 3.3K	1	
R675		ERJ3GEYJ102	CHIP 1/20W 1K	1	
R676		ERJ3GEYJ103	CHIP 1/20W 10K	1	
R677		ERJ3GEYJ102	CHIP 1/20W 1K	1	
R678		ERJ3GEYJ103	CHIP 1/20W 10K	1	
R679		ERJ3GEYJ332	CHIP 1/20W 3.3K	1	
R680		ERJ3GEYJ332	CHIP 1/20W 3.3K	1	
R681		ERJ3GEYJ223	CHIP 1/20W 22K	1	
R682		ERJ3GEYJ223	CHIP 1/20W 22K	1	
R683		ERJ3GEYJ562	CHIP 1/20W 5.6K	1	
R684		ERJ3GEYJ681	CHIP 1/20W 680	1	
R685		ERJ3GEYJ105	CHIP 1/20W 1M	1	
R686		ERJ3GEYJ333	CHIP 1/20W 33K	1	
R687		ERJ3GEYJ182	CHIP 1/20W 1.8K	1	
R688		ERJ3GEYJ333	CHIP 1/20W 33K	1	
R689		ERJ3GEYJ182	CHIP 1/20W 1.8K	1	
R690		ERJ3GEYJ393	CHIP 1/20W 39K	1	
R691		ERJ3GEYJ563	CHIP 1/20W 56K	1	
R692		ERJ3GEYJ100	CHIP 1/20W 10K	1	
R693		ERJ3GEYJ103	CHIP 1/20W 10K	1	
R694		ERJ3GEYJ103	CHIP 1/20W 10K	1	
R695		ERJ3GEYJ103	CHIP 1/20W 10K	1	
R696		ERJ3GEYJ103	CHIP 1/20W 10K	1	
R697		ERJ3GEYJ394	CHIP 1/20W 390K	1	
R698		ERJ3GEYJ474	CHIP 1/20W 470K	1	
R699		ERJ3GEYJ220	CHIP 1/20W 22	1	
R800		ERJ3GEYJ221	CHIP 1/20W 220	1	
R801		ERJ3GEYJ332	CHIP 1/20W 3.3K	1	
R804		ERJ3GEYJ104	CHIP 1/20W 100K	1	
R805		ERJ3GEYJ101	CHIP 1/20W 100	1	
			TRANSFORMAR		

Ref.No.		Part No.	Part Name & Description	Pcs	Remarks
T601		ETE13K43AY	TRANSFORMAR	1	
			VARIABLE RESISTORS		
VR601		EVML1GA00B53	V.RESISTOR 5K	1	
VR602		EVML1GA00B15	V.RESISTOR 100K	1	
VR603		EVM7YSX00B14	V.RESISTOR 10K	1	
			CRYSTAL OSCILLATOR		
X601		VSX0196	CRYSTAL OSCILLATOR	1	
	■	VEP27036B	E.V.F. C.B.A.		
			CAPACITORS		
C701		ECEA0JKS101I	E.CAPACITOR 6.3V 100U	1	
C702		ECSE1CY684V	T.CAPACITOR 16V 0.68U	1	
C703		ECEA1CKS100	E.CAPACITOR 16V 10U	1	
C704		ECEA0JKS470	E.CAPACITOR 6.3V 47U	1	
C705		ECEA0JK221	E.CAPACITOR 6.3V 220U	1	
C706		ECUX1H681KN	CHIP 50V 680P	1	
C707		ECUM1C224ZFN	CHIP 16V 0.22U	1	
C708		ECUX1E223KBN	CHIP 25V 0.023U	1	
C709		ECEA1CKS100	E.CAPACITOR 16V 10U	1	
C710		ECUM1H152JN	CHIP 50V 1500P	1	
C711		ECEA1CKS100	E.CAPACITOR 16V 10U	1	
C712		ECEA1AF470	E.CAPACITOR 10V 47U	1	
C713		ECEA0JK221	E.CAPACITOR 6.3V 220U	1	
C714		ECQK1332JZ	P.CAPACITOR	1	
C715		ECEA1CKS220I	E.CAPACITOR 16V 22U	1	
C716		ECUX1H181KN	CHIP 50V 180P	1	
C717		ECEA1HKS4R7	E.CAPACITOR 50V 4.7U	1	
C718		VCK0057K121	C.CAPACITOR 120P	1	
C719		VCK0058K331	C.CAPACITOR 330P	1	
C720		ECUX1H473ZFN	CHIP 50V 0.047U	1	
C721		ECUX1H473ZFN	CHIP 50V 0.047U	1	
C722		ECUX1H104ZFN	CHIP 50V 0.1U	1	
			DIODES		
D701		MA151K	DIODE	1	
D702		ERA91-02	DIODE	1	
D703		ERA34-10	DIODE	1	
			INTEGRATED CIRCUITS		
IC701		AN2510S	IC	1	
			COILS		
L701		ELC04D002	COIL	1	
L702		ELH5L313	COIL	1	
P701		VJP1599T	CONNECTOR(MALE) 6P	1	
P702		VJP1597T	CONNECTOR(MALE) 4P	1	
			TRANSISTORS		
Q701		2SB709	TRANSISTOR	1	

Ref.No.		Part No.	Part Name & Description	Pcs	Remarks
Q702		2SD968A	TRANSISTOR	1	
Q703		2SA1022	TRANSISTOR	1	
			RESISTORS		
R701		ERJ3GEYK6R8	CHIP 1/20W 6.8	1	
R702		ERJ6GEYG682	CHIP 1/16W 6.8K	1	
R703		ERJ3GEYJ392	CHIP 1/20W 3.9K	1	
R704		ERJ3GEYJ182	CHIP 1/20W 1.8K	1	
R705		ERJ6GEYK4R7	CHIP 1/16W 4.7	1	
R706		ERJ6GEYJ150	CHIP 1/16W 15	1	
R707		ERJ6GEYJ151	CHIP 1/16W 150	1	
R708		ERJ3GEYJ102	CHIP 1/20W 1K	1	
R709		ERJ3GEYJ163	CHIP 1/20W 16K	1	
R710		ERJ3GEYJ561	CHIP 1/20W 560	1	
R711		ERJ3GEYJ102	CHIP 1/20W 1K	1	
R712		ERJ3GEYJ124	CHIP 1/20W 120K	1	
R713		ERJ3GEYJ222	CHIP 1/20W 2.2K	1	
R714		ERJ3GEYJ562	CHIP 1/20W 5.6K	1	
R715		ERJ3GEYJ102	CHIP 1/20W 1K	1	
R716		ERJ3GEYJ102	CHIP 1/20W 1K	1	
R717		ERJ3GEYJ561	CHIP 1/20W 560	1	
R718		ERJ6GEYJ222	CHIP 1/16W 2.2K	1	
R719		ERJ3GEYJ222	CHIP 1/20W 2.2K	1	
R720		ERJ3GEYJ274	CHIP 1/20W 270K	1	
R721		ERJ3GEYJ223	CHIP 1/20W 22K	1	
R722		ERJ3GEYJ682	CHIP 1/20W 6.8K	1	
R723		ERJ3GEYJ102	CHIP 1/20W 1K	1	
R724		ERJ3GEYJ105	CHIP 1/20W 1M	1	
R726		ERJ6GEYK155	CHIP 1/16W 1.5M	1	
R727		ERJ6GEYK155	CHIP 1/16W 1.5M	1	
R728		ERJ6GEYK335	CHIP 1/16W 3.3M	1	
R729		ERJ6GEYK225	CHIP 1/16W 2.2M	1	
R730		ERJ3GEYJ821	CHIP 1/20W 820	1	
R731		ERJ3GEYJ102	CHIP 1/20W 1K	1	
			TRANSFORMAR		
T701		ETF14L26A	FLYBACK TRANS.	1	
			THERMISTER		
TH701		VRT0012	THERMISTER	1	
			VARIABLE RESISTOR		
VR701		EVM7YSW00BE2	V.RESISTOR	1	
VR702		EVM7YSX00B53	V.RESISTOR 5K	1	
VR704		VRV0040B225	V.RESISTOR	1	
VR705		VRV0040B105	V.RESISTOR	1	
	■	VEP06487A	MAIN C.B.A.		INCLUDING THE
			(POWER, SERVO, AUDIO SYSTEM		SUB SYSTEMCONTROL
			CONTROL, SUB VIDEO)		C.B.A. (VEP 06486A)
			CAPACITORS		
C1001		ECEA1CKAJ101	E.CAPACITOR 16V 100U	1	
C1002		ECEA1CKAJ101	E.CAPACITOR 16V 100U	1	
C1003		ECEA0JSJ151	E.CAPACITOR 6.3V 150U	1	
C1004		ECEA0JSJ151	E.CAPACITOR 6.3V 150U	1	
C1005		ECEA1AU221	E.CAPACITOR 10V 220U	1	
C1006		ECEA1ASJ101	E.CAPACITOR 10V 100U	1	
C1007		ECEA1CKAJ101	E.CAPACITOR 16V 100U	1	
C1008		ECEA1CKAJ101	E.CAPACITOR 16V 100U	1	

Ref.No.		Part No.	Part Name & Description	Pcs	Remarks
C1009		ECEA1EKA4R7	E.CAPACITOR 25V 4.7U	1	
C1010		ECEA1EKA4R7	E.CAPACITOR 25V 4.7U	1	
C1011		ECEA1ASJ101	E.CAPACITOR 10V 100U	1	
C1012		ECEA1ASJ101	E.CAPACITOR 10V 100U	1	
C1013		ECEA1AKA330	E.CAPACITOR 10V 33U	1	
C1014		ECEA1AKS330	E.CAPACITOR 10V 33U	1	
C1015		ECSE1EY474Z	T.CAPACITOR 25V 0.47U	1	
C1016		ECUX1E473FN	CHIP 25V 0.047U	1	
C1017		ECUX1E223ZFN	CHIP 25V 0.022U	1	
C1018		ECUX1C105ZF	CHIP 16V 1U	1	
C1019		ECUX1C105ZF	CHIP 16V 1U	1	
C1020		ECUX1H471KBN	CHIP 50V 470P	1	
C1021		ECUX1H820JCM	CHIP 50V 82P	1	
C1022		ECUX1H560KBM	CHIP 50V 56P	1	
C1023		ECUX1C105ZF	CHIP 16V 1U	1	
C1024		ECUX1E104ZFN	CHIP 25V 0.1U	1	
C1025		ECUX1E473FN	CHIP 25V 0.047U	1	
C1026		ECUX1H472KBN	CHIP 50V 4700P	1	
C1027		ECUX1E104ZFN	CHIP 25V 0.1U	1	
C1028		ECUM1H272KBV	CHIP 50V 2700U	1	
C1029		ECUX1H332KBN	CHIP 50V 3300P	1	
C1030		ECUX1C105ZF	CHIP 16V 1U	1	
C1031		ECUX1C105ZF	CHIP 16V 1U	1	
C1032		ECUX1C105ZF	CHIP 16V 1U	1	
C1033		ECUX1C105ZF	CHIP 16V 1U	1	
C1034		ECEA0JKA101	E.CAPACITOR 6.3V 100U	1	
C1035		ECEA1CKAJ101	E.CAPACITOR 6.3V 100U	1	
C2001		ECUM1H101JV	CHIP 50V 100P	1	
C2002		ECUM1H101JV	CHIP 50V 100P	1	
C2003		ECUX1E103ZFM	CHIP 25V 0.01U	1	
C2004		ECUX1H473ZFN	CHIP 50V 0.047U	1	
C2005		ECEA0JKS470	E.CAPACITOR 6.3V 47U	1	
C2006		ECEA0JKS470	E.CAPACITOR 6.3V 47U	1	
C2007		ECUX1H472KBN	CHIP 50V 4700P	1	
C2009		ECEA0JKS220	E.CAPACITOR 6.3V 22U	1	
C2010		ECEA0JKS220	E.CAPACITOR 6.3V 22U	1	
C2011		ECUX1H473ZFN	CHIP 50V 0.047U	1	
C2012		ECUX1E102KBM	CHIP 25V 1K	1	
C2013		ECUX1H471KBM	CHIP 50V 470K	1	
C2014		ECEA1VSN2R2	E.CAPACITOR 35V 2.2U	1	
C2015		ECUX1C105ZF	CHIP 16V 1U	1	
C2016		ECUX1C105ZF	CHIP 16V 1U	1	
C2017		ECUX1E102KBM	CHIP 25V 1000P	1	
C2018		ECUX1E102KBM	CHIP 25V 1000P	1	
C2019		ECEA0JKS330	E.CAPACITOR 6.3V 33U	1	
C2020		ECUX1H820JCM	E.CAPACITOR 50V 82P	1	
C2021		ECUX1C105ZF	E.CAPACITOR 16V 1U	1	
C2022		ECUX1C105ZF	E.CAPACITOR 16V 1U	1	
C2023		ECUX1H333ZFN	CHIP 50V 0.033U	1	
C2024		ECEA1CKS100	E.CAPACITOR 16V 10U	1	
C2025		ECEA0JKA101	E.CAPACITOR 6.3V 100U	1	
C2026		ECEA0JKA101	E.CAPACITOR 6.3V 100U	1	
C2027		ECUX1H472KBM	E.CAPACITOR 50V 4700P	1	
C2028		ECUX1C105ZF	E.CAPACITOR 16V 1U	1	
C2029		ECUX1E102KBM	E.CAPACITOR 25V 1000P	1	
C2030		ECUX1E104ZFN	CHIP 25V 0.1U	1	
C2031		ECUM1C474ZFM	CHIP 16V 0.47U	1	
C2032		ECUX1E103ZFM	CHIP 25V 0.01U	1	
C2033		ECUX1C105ZF	CHIP 16V 1U	1	
C2034		ECUM1H101JV	CHIP 50V 100P	1	
C2035		ECUX1E102KBM	CHIP 25V 1000P	1	
C2036		ECUX1C105ZF	CHIP 16V 1U	1	
C2036		ECUX1E104ZFM	CHIP 25V 0.1U	1	
C2037		ECEA0JKS470	E.CAPACITOR 6.3V 47U	1	
C2038		ECEA0JKS330	E.CAPACITOR 6.3V 33U	1	
C2039		ECEA0JKS330	E.CAPACITOR 6.3V 33U	1	
C2040		ECUX1H103ZFN	CHIP 50V 0.01U	1	
C2041		ECUX1E104ZFN	CHIP 25V 0.1U	1	
C2042		ECEA0JKA101	E.CAPACITOR 6.3V 100U	1	
C2043		ECUX1C105ZF	CHIP 16V 1U	1	
C2044		ECUX1E104ZFN	CHIP 25V 0.1U	1	
C2045		ECQX1H393JS	P.CAPACITOR 50V 0.039U	1	
C2046		ECUX1E103ZFM	CHIP 25V 0.01U	1	
C2047		ECUX1C105ZF	CHIP 16V 1U	1	
C2048		ECUX1E105JCM	CHIP 25V 1U	1	

Ref.No.		Part No.	Part Name & Description	Pcs	Remarks
C2049		ECUX1E105JCM	CHIP 25V 1U	1	
C2050		ECUX1E104ZFN	CHIP 25V 0.1U	1	
C2051		ECUM1C474ZFM	CHIP 16V 0.047U	1	
C2052		ECUX1E104ZFN	CHIP 25V 0.1U	1	
C2053		ECEA0JKS470	E.CAPACITOR 6.3V 47U	1	
C2054		ECEA0JKS470	E.CAPACITOR 6.3V 47U	1	
C3501		ECUX1C105ZF	CHIP 16V 1U	1	
C3510		ECEA0JK221	E.CAPACITOR 6.3V 220U	1	
C3511		ECEA0JK221	E.CAPACITOR 6.3V 220U	1	
C3512		ECUX1E220JCM	CHIP 25V 22P	1	
C3514		ECUX1E103ZFM	CHIP 25V 0.01U	1	
C3515		ECEA1AKS470	E.CAPACITOR 10V 47U	1	
C3516		ECUX1E103ZFM	CHIP 25V 0.01U	1	
C3517		ECUX1E103ZFM	CHIP 25V 0.01U	1	
C3518		ECEA0JKS470	E.CAPACITOR 6.3V 47U	1	
C3519		ECUX1E104ZFN	CHIP 25V 0.1U	1	
C3522		ECUX1E103ZFM	CHIP 25V 0.01U	1	
C3526		ECUX1E104ZFN	CHIP 25V 0.1U	1	
C3527		ECUX1E104ZFN	CHIP 25V 0.1U	1	
C3528		ECUX1E104ZFN	CHIP 25V 0.1U	1	
C3530		ECQV1H104JZ	P.CAPACITOR 50V 0.1U	1	
C3531		ECUX1E104ZFN	CHIP 25V 0.1U	1	
C3532		ECUX1E105JCM	CHIP 25V 1U	1	
C3533		ECCF1H150JC	C.CAPACITOR 50V 15P	1	
C3534		ECQV1H104JZ	P.CAPACITOR 50V 0.1U	1	
C4001		ECQP1562JZ	P.CAPACITOR 100V 5600P	1	
C4002		ECQB1H333JH	P.CAPACITOR 50V 0.033U	1	
C4003		ECUX1H153KBN	CHIP 50V 0.015U	1	
C4004		ECUX1H472KBM	CHIP 50V 4700P	1	
C4006		ECUX1E332KBM	CHIP 25V 3300P	1	
C4007		ECEA1HKL010	E.CAPACITOR 50V 1U	1	
C4008		ECUX1H333ZFN	CHIP 50V 0.033U	1	
C4009		ECEA0JKS330	E.CAPACITOR 6.3V 33U	1	
C4010		ECEA1HKK010	E.CAPACITOR 50V 1U	1	
C4011		ECUX1H822KBN	CHIP 50V 8200P	1	
C4012		ECEA0JKS220	E.CAPACITOR 6.3V 22U	1	
C4013		ECEA1HKK010	E.CAPACITOR 50V 1U	1	
C4014		ECUM1H271KBN	CHIP 50V 270P	1	
C4015		ECEA0JKS470	E.CAPACITOR 6.3V 47U	1	
C4016		ECEA1CKS470	E.CAPACITOR 16V 47U	1	
C4017		ECEA1CKS220	E.CAPACITOR 16V 22U	1	
C4018		ECEA0JKS330	E.CAPACITOR 6.3V 33U	1	
C4019		ECEA1HKK010	E.CAPACITOR 50V 1U	1	
C4020		ECUX1H333ZFN	CHIP 50V 0.033U	1	
C4021		ECUX1H273KBN	CHIP 50V 0.027U	1	
C4024		ECEA0JKS220	E.CAPACITOR 6.3V 22U	1	
C4025		ECEA1CKS220	E.CAPACITOR 16V 22U	1	
C4026		ECEA0JKS220	E.CAPACITOR 6.3V 22U	1	
C4027		ECUX1H682KBN	CHIP 50V 6800P	1	
C4028		ECEA1CKS100	E.CAPACITOR 16V 10U	1	
C4029		ECUX1H153KBN	CHIP 50V 0.015U	1	
C4030		ECEA1AKS470	E.CAPACITOR 10V 47U	1	
C4031		ECUX1H103ZFN	CHIP 50V 0.01U	1	
C4032		ECEA1HSN010	E.CAPACITOR 50V 1U	1	
C4033		ECEA1HKK010	E.CAPACITOR 50V 1U	1	
C4034		ECEA0JKS101	E.CAPACITOR 6.3V 100U	1	
C4035		ECUX1H391KBM	CHIP 50V 390P	1	
C4036		ECEA0JKS101	E.CAPACITOR 6.3V 100U	1	
C4037		ECEA1EKK4R7	E.CAPACITOR 25V 4.7U	1	
C4038		ECEA1AKS330	E.CAPACITOR 10V 33U	1	
C4039		ECUX1H472KBM	CHIP 50V 4700P	1	
C4040		ECUX1E151JVM	CHIP 25V 150P	1	
C6001		ECUX1E103ZFM	CHIP 25V 0.01U	1	
C6002		ECEA0JKS470	E.CAPACITOR 6.3V 47U	1	
C6003		ECRJA030E12X	TRIMMER	1	
C6004		ECUX1E330JCM	CHIP 25V 33P	1	
C6005		ECUX1E103ZFM	CHIP 25V 0.01U	1	
C6006		ECUX1E103ZFM	CHIP 25V 0.01U	1	
C6007		ECUX1E103ZFM	CHIP 25V 0.01U	1	
C6008		ECUX1E104ZFN	CHIP 25V 0.1U	1	
C6009		ECEA0JKA470	E.CAPACITOR 6.3V 47U	1	
C6010		ECUX1E103ZFM	CHIP 25V 0.01U	1	
C6011		ECEA1AKS220	E.CAPACITOR 10V 22U	1	
C6012		ECEA1AKS220	E.CAPACITOR 10V 22U	1	
C6013		ECEA1CKK100	E.CAPACITOR 16V 10U	1	

Ref.No.		Part No.	Part Name & Description			Pcs	Remarks
C6014		ECUX1C105ZF	CHIP	16V	1U	1	
C6015		ECUX1C105ZF	CHIP	16V	1U	1	
C6016		ECUX1E220JCM	CHIP	25V	22P	1	
C6017		ECUX1E220JCM	CHIP	25V	22P	1	
C6018		ECUX1C105ZF	CHIP	16V	1U	1	
C6019		ECEA1CKS470	E.CAPACITOR	16V	47U	1	
C6020		ECUX1E104ZFN	CHIP	25V	0.1U	1	
C6021		ECUX1E104ZFN	CHIP	25V	0.1U	1	
C6022		ECUX1E104ZFN	CHIP	25V	0.1U	1	
C6023		ECUX1E104ZFN	CHIP	25V	0.1U	1	
C6024		ECQV1H104JZ	P.CAPACITOR	50V	0.1U	1	
C6901		ECUX1C105ZF	CHIP	16V	1U	1	
C6902		ECUX1C105ZF	CHIP	16V	1U	1	
			DIODES				
D1001		MA701A	DIODE			1	
D1002		ERA84-009	DIODE			1	
D1003		MA3075H	DIODE			1	
D1004		MA141WA	DIODE			1	
D1005		MA141WA	DIODE			1	
D1006		ERB81-004	DIODE			1	
D1007		MA141A	DIODE			1	
D1008		MA141K	DIODE			1	
D1009		MA141A	DIODE			1	
D1011		MA165	DIODE			1	
D2001		MA143	DIODE			1	
D2002		MA143	DIODE			1	
D2003		MA143	DIODE			1	
D2005		MA141WK	DIODE			1	
D2006		MA141WK	DIODE			1	
D2007		MA141WK	DIODE			1	
D2009		MA141K	DIODE			1	
D2011		MA165	DIODE			1	
D4001		MA141WK	DIODE			1	
D4002		MA141K	DIODE			1	
D4003		MA141WK	DIODE			1	
D4004		MA141K	DIODE			1	
D6001		MA121	DIODE			1	
D6002		MA141WK	DIODE			1	
D6003		MA121	DIODE			1	
D6004		MA141WA	DIODE			1	
D6010		MA141WA	DIODE			1	
D6012		MA143	DIODE			1	
D6013		MA141WA	DIODE			1	
D6017		MA141K	DIODE			1	
D6019		MA141K	DIODE			1	
D6022		MA141A	DIODE			1	
D6025		MA143	DIODE			1	
D6026		MA165	DIODE			1	
D6027		MA165	DIODE			1	
D6901		MA141WK	DIODE			1	
D6902		MA141WK	DIODE			1	
			INTEGRATED CIRCUITS				
IC1001		BA6149LS	IC			1	
IC1002		UN102	IC			1	
IC1003		UPC358G2	IC			1	
IC1004		NJM2903M	IC			1	
IC2001		MN67461VDJF	IC			1	
IC2002		AN3798S	IC			1	
IC2005		MN1551VYJS	IC			1	
IC3501		UPD4066BG	IC			1	
IC4001		UPC1513G	IC			1	
IC4002		UPC2300G	IC			1	
IC6001		UPD75108G706	IC			1	
IC6002		NJM2903M	IC			1	
IC6003		UPD6105G102	IC			1	
IC6004		S6700A	IC			1	
IC6005		M54543ASL	IC			1	
IC6006		S81250HGRD	IC			1	
IC6007		UPD4094BG	IC			1	

Ref.No.		Part No.	Part Name & Description		Pcs	Remarks
			COILS			
L1001		ELC06D005	COIL	47UH	1	
L1002		ELC08D038	COIL	180UH	1	
L1003		VLQ0129	COIL	300UH	1	
L1004		ELC08D025	COIL	600UH	1	
L1005		ELC06D013	COIL	33UH	1	
L1006		VLQEL05F390K	COIL	39UH	1	
L1008		ELEPG221KA	COIL	220UH	1	
L1009		ELC04D006	COIL	120UH	1	
L1010		ELEPG221KA	COIL	220UH	1	
L1011		VLQEL04F101K	COIL	100UH	1	
L3501		VLQEL04F101K	COIL	100UH	1	
L3502		VLQEL04F101K	COIL	100UH	1	
L3503		VLQEL04F101K	COIL	100UH	1	
L3504		VLQ0163K101	COIL	100UH	1	
L3505		VLQEL04F101K	COIL	100UH	1	
L3506		VLQEL05F101K	COIL	100UH	1	
L4001		VLQEL05F101K	COIL	100UH	1	
L4002		ELTMR822JB	TRANSFORMER		1	
L4003		ELTMR153KB	TRANSFORMER		1	
L4004		VLQEL05F221K	COIL	220UH	1	
L6001		VLQ0163K390	COIL	39UH	1	
L6002		VLQEL05F101K	COIL	100UH	1	
			CONNECTORS			
P1002		VJS2137	CONNECTOR		1	
P1011		VJP1597T	CONNECTOR	(MALE)	1	
P2001		VJS2247	CONNECTOR		1	
P3501		VJS2248	CONNECTOR		1	
P3502		VJS2233	CONNECTOR		1	
P3503		VJP2237	CONNECTOR	(MALE)	1	
P3504		VJP2272	CONNECTOR	(MALE)	1	
P4001		VJP2261	CONNECTOR	(MALE)	1	
P4002		VJP2265	CONNECTOR	(MALE)	1	
P6001		VJP2271	CONNECTOR	(MALE)	1	
P6002		VJP2262	CONNECTOR	(MALE)	1	
P6003		VJS2317	CONNECTOR		1	
P6004		VJS2245	CONNECTOR		1	
P6005		VJP2272	CONNECTOR	(MALE)	1	
P6006		VJP2271	CONNECTOR	(MALE)	1	
P6007		VJP2271	CONNECTOR	(MALE)	1	
P6008		VJP2262	CONNECTOR	(MALE)	1	
P6009		VJP2271	CONNECTOR	(MALE)	1	
P6010		VJP2272	CONNECTOR	(MALE)	1	
P6011		VJP2262	CONNECTOR	(MALE)	1	
			TRANSISTORS			
Q1001		XN1501	TRANSISTOR		1	
Q1002		2SB956	TRANSISTOR		1	
Q1003		2SD1526	TRANSISTOR		1	
Q1004		2SB956	TRANSISTOR		1	
Q1005		2SB956	TRANSISTOR		1	
Q2001		2SD1819	TRANSISTOR		1	(Q,R)
Q3501		2SB1218	TRANSISTOR		1	
Q3502		2SB1218	TRANSISTOR		1	
Q3507		2SB970	TRANSISTOR		1	
Q3510		2SB1218	TRANSISTOR		1	
Q3511		XN4601	TRANSISTOR		1	
Q3512		XN4601	TRANSISTOR		1	
Q3513		2SC3931	TRANSISTOR		1	
Q3515		2SB970	TRANSISTOR		1	
Q3516		2SB970	TRANSISTOR		1	
Q3517		2SD1819	TRANSISTOR		1	(Q,R)
Q3521		2SC3931	TRANSISTOR		1	
Q3523		2SD1819	TRANSISTOR		1	(Q,R)
Q4001		2SD1820	TRANSISTOR		1	
Q4002		2SD1328	TRANSISTOR		1	(Q,R)
Q4003		2SD1819	TRANSISTOR		1	(Q,R)
Q4005		2SD1819	TRANSISTOR		1	(Q,R)
Q4006		2SB1219	TRANSISTOR		1	(Q,R)

Ref.No.		Part No.	Part Name & Description	Pcs	Remarks
Q4007		2SD1823	TRANSISTOR	1	
Q4009		2SD1819	TRANSISTOR	1	(Q,R)
Q6001		XN1501	TRANSISTOR	1	
Q6003		2SD1819	TRANSISTOR	1	(Q,R)
Q6004		2SB970	TRANSISTOR	1	(Q,R)
Q6005		2SD1819	TRANSISTOR	1	(Q,R)
			COMBINATION PARTS		
QR1001		UN5111	TRANSISTOR-RESISTOR	1	
QR1002		UN5111	TRANSISTOR-RESISTOR	1	
QR1003		UN5213	TRANSISTOR-RESISTOR	1	
QR1004		UN5213	TRANSISTOR-RESISTOR	1	
QR2001		XN4215	TRANSISTOR-RESISTOR	1	
QR2002		UN5113	TRANSISTOR-RESISTOR	1	
QR2003		UN5213	TRANSISTOR-RESISTOR	1	
QR2004		UN5117	TRANSISTOR-RESISTOR	1	
QR2005		UN5117	TRANSISTOR-RESISTOR	1	
QR3501		UN5213	TRANSISTOR-RESISTOR	1	
QR3502		UN5213	TRANSISTOR-RESISTOR	1	
QR3503		UN5212	TRANSISTOR-RESISTOR	1	
QR3504		UN5212	TRANSISTOR-RESISTOR	1	
QR3505		UN5112	TRANSISTOR-RESISTOR	1	
QR3507		UN5213	TRANSISTOR-RESISTOR	1	
QR4001		UN5116	TRANSISTOR-RESISTOR	1	
QR4002		UN5212	TRANSISTOR-RESISTOR	1	
QR6001		UN5213	TRANSISTOR-RESISTOR	1	
QR6002		UN5213	TRANSISTOR-RESISTOR	1	
QR6004		UN5214	TRANSISTOR-RESISTOR	1	
QR6005		UN5113	TRANSISTOR-RESISTOR	1	
QR6006		UN5115	TRANSISTOR-RESISTOR	1	
QR6007		UN5213	TRANSISTOR-RESISTOR	1	
QR6008		UN5213	TRANSISTOR-RESISTOR	1	
QR6009		XN4316	TRANSISTOR-RESISTOR	1	
QR6011		UN5217	TRANSISTOR-RESISTOR	1	
QR6013		UN5217	TRANSISTOR-RESISTOR	1	
QR6014		UN521E	TRANSISTOR-RESISTOR	1	
QR6015		UN5112	TRANSISTOR-RESISTOR	1	
QR6016		UN5212	TRANSISTOR-RESISTOR	1	
QR6018		XN1213	TRANSISTOR-RESISTOR	1	
QR6020		UN5217	TRANSISTOR-RESISTOR	1	
QR6021		UN5214	TRANSISTOR-RESISTOR	1	
QR6022		UN5213	TRANSISTOR-RESISTOR	1	
QR6901		UN2114	TRANSISTOR-RESISTOR	1	
			RESISTORS		
R1001		ERJ3GEYJ222	CHIP 1/20W 2.2K	1	
R1002		ERJ3GEYJ103	CHIP 1/20W 10K	1	
R1003		ERJ3GEYJ334	CHIP 1/20W 330K	1	
R1004		ERJ3GEYJ154	CHIP 1/20W 150K	1	
R1005		ERJ3GEYJ563	CHIP 1/20W 56K	1	
R1006		ERJ3GEYJ102	CHIP 1/20W 1K	1	
R1007		ERJ3GEYJ391	CHIP 1/20W 390	1	
R1008		ERJ8GCYJ821	CHIP 1/8W 820	1	
R1009		ERJ3GEYJ391	CHIP 1/20W 390	1	
R1010		ERJ8GCYJ821	CHIP 1/8W 820	1	
R1011		ERJ3GEYJ391	CHIP 1/20W 390	1	
R1012		ERJ8GCYJ821	CHIP 1/8W 820	1	
R1013		ERJ3GEYJ391	CHIP 1/20W 390	1	
R1014		ERJ8GCYJ681	CHIP 1/8W 680	1	
R1015		ERJ3GEYJ122	CHIP 1/20W 1.2K	1	
R1016		ERJ3GEYJ183	CHIP 1/20W 18K	1	
R1017		ERJ3GEYJ273	CHIP 1/20W 27K	1	
R1018		ERJ3GEYJ183	CHIP 1/20W 18K	1	
R1019		ERJ3GEYJ183	CHIP 1/20W 18K	1	
R1020		ERJ3GEYJ473	CHIP 1/20W 47K	1	
R1021		ERJ3GEYJ104	CHIP 1/20W 100K	1	
R1022		ERJ3GEYJ821	CHIP 1/20W 820K	1	
R1023		ERJ3GEYJ104	CHIP 1/20W 100K	1	
R1024		ERJ3GEYJ104	CHIP 1/20W 100K	1	
R1025		ERJ3GEYJ105	CHIP 1/20W 1M	1	
R1026		ERJ3GEYJ682	CHIP 1/20W 68K	1	

Ref.No.		Part No.	Part Name & Description	Pcs	Remarks
R1027		ERJ3GEYJ105	CHIP 1/20W 1M	1	
R1028		ERJ3GEYJ272	CHIP 1/20W 2.7K	1	
R1029		ERJ3GEYJ104	CHIP 1/20W 100K	1	
R1030		ERJ3GEYJ472	CHIP 1/20W 4.7K	1	
R1031		ERJ3GEYJ330	CHIP 1/20W 33	1	
R1032		ERJ3GEYJ821	CHIP 1/20W 820	1	
R1034		ERJ8GCYJ560	CHIP 1/8W 56	1	
R1035		ERJ3GEYJ753	CHIP 1/20W 75K	1	
R1036		ERJ3GEYJ273	CHIP 1/20W 27K	1	
R1037		VSF0059	FUSE	1	
R1038		ERJ3GEYJ105	CHIP 1/20W 1M	1	
R1039		ERJ3GEYJ104	CHIP 1/20W 100K	1	
R1040		ERJ3GEYJ102	CHIP 1/20W 1K	1	
R1041		ERJ3GEYJ102	CHIP 1/20W 1K	1	
R2001		ERJ3GEYJ102	CHIP 1/20W 1K	1	
R2002		ERJ3GEYJ102	CHIP 1/20W 1K	1	
R2003		ERJ3GEYJ392	CHIP 1/20W 3.9K	1	
R2004		ERJ3GEYJ333	CHIP 1/20W 33K	1	
R2005		ERJ3GEYJ104	CHIP 1/20W 100K	1	
R2006		ERJ3GEYJ104	CHIP 1/20W 100K	1	
R2007		ERJ3GEYJ154	CHIP 1/20W 150K	1	
R2008		ERJ3GEY0R00	CHIP 1/20W 0	1	
R2009		ERJ3GEYJ154	CHIP 1/20W 150K	1	
R2010		ERJ3GEYJ103	CHIP 1/20W 10K	1	
R2011		ERJ3GEYJ683	CHIP 1/20W 68K	1	
R2012		ERJ3GEYJ334	CHIP 1/20W 330K	1	
R2013		ERJ3GEYJ154	CHIP 1/20W 150K	1	
R2014		ERJ3GEYJ473	CHIP 1/20W 47K	1	
R2015		ERJ3GEYJ183	CHIP 1/20W 18K	1	
R2016		ERJ3GEY0R00	CHIP 1/20W 0	1	
R2017		ERJ3GEYJ103	CHIP 1/20W 10K	1	
R2018		ERJ3GEYJ471	CHIP 1/20W 470	1	
R2019		ERJ3GEYJ105	CHIP 1/20W 1M	1	
R2020		ERJ3GEYJ222	CHIP 1/20W 2.2K	1	
R2021		ERJ3GEY0R00	CHIP 1/20W 0	1	
R2022		ERJ3GEYJ271	CHIP 1/20W 270	1	
R2023		ERJ3GEY0R00	CHIP 1/20W 0	1	
R2024		ERJ3GEYJ152	CHIP 1/20W 1.5K	1	
R2025		ERJ3GEYJ682	CHIP 1/20W 6.8K	1	
R2026		ERJ3GEY0R00	CHIP 1/20W 0	1	
R2028		ERJ3GEYJ103	CHIP 1/20W 10K	1	
R2029		ERJ3GEYJ105	CHIP 1/20W 1M	1	
R2030		ERJ3GEYJ103	CHIP 1/20W 10K	1	
R2031		ERJ3GEYJ273	CHIP 1/20W 27K	1	
R2032		ERJ3GEYJ333	CHIP 1/20W 33K	1	
R2033		ERJ3GEYJ272	CHIP 1/20W 2.7K	1	
R2034		ERJ3GEY0R00	CHIP 1/20W 0	1	
R2035		ERJ3GEYJ154	CHIP 1/20W 150K	1	
R2036		ERJ3GEY0R00	CHIP 1/20W 0	1	
R2037		ERJ3GEYJ473	CHIP 1/20W 47K	1	
R2038		ERJ3GEYJ153	CHIP 1/20W 15K	1	
R2039		ERJ3GEYJ104	CHIP 1/20W 100K	1	
R2040		ERJ3GEY0R00	CHIP 1/20W 0	1	
R2041		ERJ3GEYJ334	CHIP 1/20W 330K	1	
R2042		ERJ3GEYJ103	CHIP 1/20W 10K	1	
R2043		ERJ3GEYJ102	CHIP 1/20W 1K	1	
R2044		ERJ3GEY0R00	CHIP 1/20W 0	1	
R2045		ERJ3GEY0R00	CHIP 1/20W 0	1	
R2046		ERJ3GEY0R00	CHIP 1/20W 0	1	
R2047		ERJ3GEYJ471	CHIP 1/20W 470K	1	
R2048		ERJ3GEYJ221	CHIP 1/20W 220K	1	
R2049		ERJ3GEYJ333	CHIP 1/20W 33K	1	
R2050		ERJ3GEYJ333	CHIP 1/20W 33K	1	
R2051		ERJ3GEYJ333	CHIP 1/20W 33K	1	
R2052		ERJ3GEYJ392	CHIP 1/20W 3.9K	1	
R2053		ERJ3GEYJ682	CHIP 1/20W 6.8K	1	
R2054		ERJ3GEYJ562	CHIP 1/20W 5.6K	1	
R2055		ERJ3GEYJ184	CHIP 1/20W 180K	1	
R2056		ERJ3GEYJ221	CHIP 1/20W 220K	1	
R2057		ERDS2TJ105	C.RESISTOR 1/4W 1000K	1	
R3501		ERJ3GEYJ392	CHIP 1/20W 3.9K	1	
R3502		ERJ3GEYJ392	CHIP 1/20W 3.9K	1	
R3503		ERJ3GEYJ103	CHIP 1/20W 10K	1	
R3517		ERJ3GEYJ103	CHIP 1/20W 10K	1	
R3518		ERJ3GEYJ472	CHIP 1/20W 4.7K	1	

Ref.No.		Part No.	Part Name & Description			Pcs	Remarks
R3519		ERJ3GEYJ472	CHIP	1/20W	4.7K	1	
R3520		ERJ3GEYJ332	CHIP	1/20W	3.3K	1	
R3521		ERJ3GEYJ821	CHIP	1/20W	820	1	
R3522		ERJ3GEYJ821	CHIP	1/20W	820	1	
R3526		ERJ3GEYJ102	CHIP	1/20W	1K	1	
R3527		ERJ3GEY0R00	CHIP	1/20W	0	1	
R3528		ERJ3GEYJ560	CHIP	1/20W	56	1	
R3529		ERJ3GEYJ220	CHIP	1/20W	22	1	
R3530		ERJ3GEYJ821	CHIP	1/20W	820	1	
R3531		ERJ3GEYJ821	CHIP	1/20W	820	1	
R3532		ERJ3GEYJ152	CHIP	1/20W	1.5K	1	
R3533		ERJ3GEYJ472	CHIP	1/20W	4.7K	1	
R3534		ERJ3GEYJ681	CHIP	1/20W	680	1	
R3535		ERJ3GEYJ391	CHIP	1/20W	390	1	
R3536		ERJ3GEYJ182	CHIP	1/20W	1.8K	1	
R3537		ERJ3GEYJ102	CHIP	1/20W	1K	1	
R3542		ERJ3GEYJ472	CHIP	1/20W	4.7K	1	
R3543		ERJ3GEYJ472	CHIP	1/20W	4.7K	1	
R3544		ERJ3GEYJ332	CHIP	1/20W	3.3K	1	
R3545		ERJ3GEYJ682	CHIP	1/20W	6.8K	1	
R3546		ERJ3GEYJ102	CHIP	1/20W	1K	1	
R3547		ERJ3GEYJ102	CHIP	1/20W	1K	1	
R3548		ERJ3GEYJ331	CHIP	1/20W	330	1	
R3549		ERJ3GEYJ182	CHIP	1/20W	1.8K	1	
R3552		ERJ3GEYJ821	CHIP	1/20W	820	1	
R3559		ERJ3GEYJ102	CHIP	1/20W	1K	1	
R3563		ERJ3GEY0R00	CHIP	1/20W	0	1	
R3564		ERJ3GEYJ393	CHIP	1/20W	39K	1	
R3565		ERJ3GEYJ393	CHIP	1/20W	39K	1	
R3566		ERJ3GEYJ154	CHIP	1/20W	150K	1	
R4001		ERJ3GEYJ100	CHIP	1/20W	10	1	
R4002		ERJ3GEYJ153	CHIP	1/20W	15K	1	
R4003		ERJ3GEYJ102	CHIP	1/20W	1K	1	
R4004		ERJ3GEYJ183	CHIP	1/20W	18K	1	
R4005		ERJ3GEYJ151	CHIP	1/20W	150	1	
R4006		ERJ3GEYJ184	CHIP	1/20W	180K	1	
R4007		ERJ3GEYJ332	CHIP	1/20W	3.3K	1	
R4008		ERJ3GEYJ181	CHIP	1/20W	180	1	
R4009		ERJ3GEYJ122	CHIP	1/20W	1.2K	1	
R4010		ERJ3GEYJ472	CHIP	1/20W	4.7K	1	
R4012		ERJ3GEYJ472	CHIP	1/20W	4.7K	1	
R4013		ERJ3GEYJ153	CHIP	1/20W	15K	1	
R4014		ERJ3GEYJ122	CHIP	1/20W	1.2K	1	
R4015		ERJ3GEYJ100	CHIP	1/20W	10	1	
R4016		ERJ3GEYJ181	CHIP	1/20W	180	1	
R4017		ERJ3GEYJ472	CHIP	1/20W	4.7K	1	
R4018		ERJ3GEYJ105	CHIP	1/20W	1M	1	
R4025		ERJ3GEYJ273	CHIP	1/20W	27K	1	
R4026		ERJ3GEYJ333	CHIP	1/20W	33K	1	
R4027		ERJ3GEYJ561	CHIP	1/20W	560	1	
R4028		ERJ3GEYJ333	CHIP	1/20W	33K	1	
R4029		ERJ3GEYJ103	CHIP	1/20W	10K	1	
R4032		ERJ3GEYJ272	CHIP	1/20W	2.7K	1	
R4033		ERJ3GEYJ272	CHIP	1/20W	2.7K	1	
R4035		ERJ3GEYJ101	CHIP	1/20W	100	1	
R4036		ERJ3GEYJ154	CHIP	1/20W	150K	1	
R4037		ERJ3GEYJ273	CHIP	1/20W	27K	1	
R4038		ERJ3GEYJ223	CHIP	1/20W	22K	1	
R4039		ERJ3GEYJ393	CHIP	1/20W	39K	1	
R4040		ERJ3GEYJ681	CHIP	1/20W	680	1	
R4041		ERJ3GEYJ472	CHIP	1/20W	4.7K	1	
R4042		ERJ3GEYJ103	CHIP	1/20W	10K	1	
R4043		ERJ3GEYJ333	CHIP	1/20W	33K	1	
R4044		ERJ3GEYJ104	CHIP	1/20W	100K	1	
R4045		ERJ3GEYJ224	CHIP	1/20W	220K	1	
R4046		ERJ3GEYJ184	CHIP	1/20W	180K	1	
R4047		ERJ3GEYJ123	CHIP	1/20W	12K	1	
R4048		ERJ3GEYJ104	CHIP	1/20W	100K	1	
R4049		ERJ3GEYJ473	CHIP	1/20W	47K	1	
R4050		ERJ3GEYJ122	CHIP	1/20W	1.2K	1	
R4051		ERJ3GEYJ122	CHIP	1/20W	1.2K	1	
R6001		ERJ3GEYJ223	CHIP	1/20W	22K	1	
R6002		ERJ3GEYJ473	CHIP	1/20W	47K	1	
R6003		ERJ3GEYJ102	CHIP	1/20W	1K	1	
R6004		ERJ3GEYJ103	CHIP	1/20W	10K	1	

Ref.No.		Part No.	Part Name & Description			Pcs	Remarks
R6005		ERJ3GEYJ473	CHIP	1/20W	47K	1	
R6006		ERJ3GEYJ273	CHIP	1/20W	27K	1	
R6007		ERJ3GEYJ124	CHIP	1/20W	120K	1	
R6008		ERJ3GEYJ334	CHIP	1/20W	330K	1	
R6009		ERJ3GEYJ823	CHIP	1/20W	82K	1	
R6010		ERJ3GEYJ473	CHIP	1/20W	47K	1	
R6011		ERJ3GEYJ563	CHIP	1/20W	56K	1	
R6012		ERJ3GEYJ823	CHIP	1/20W	82K	1	
R6013		ERJ3GEYJ104	CHIP	1/20W	100K	1	
R6014		ERJ3GEYJ681	CHIP	1/20W	680	1	
R6015		ERJ3GEYJ103	CHIP	1/20W	10K	1	
R6016		ERJ3GEYJ104	CHIP	1/20W	100K	1	
R6017		ERJ3GEYJ104	CHIP	1/20W	100K	1	
R6018		ERJ3GEYJ103	CHIP	1/20W	10K	1	
R6020		ERJ3GEYJ563	CHIP	1/20W	56K	1	
R6021		ERJ3GEYJ102	CHIP	1/20W	1K	1	
R6022		ERJ3GEYJ102	CHIP	1/20W	1K	1	
R6023		ERJ3GEYJ101	CHIP	1/20W	100	1	
R6024		ERJ3GEYJ101	CHIP	1/20W	100	1	
R6025		ERJ3GEYJ223	CHIP	1/20W	22K	1	
R6026		ERJ3GEYJ103	CHIP	1/20W	10K	1	
R6027		ERJ3GEYJ102	CHIP	1/20W	1K	1	
R6028		ERJ3GEYJ102	CHIP	1/20W	1K	1	
R6029		ERJ3GEYJ394	CHIP	1/20W	390K	1	
R6030		ERJ3GEYJ473	CHIP	1/20W	47K	1	
R6031		ERJ3GEYJ102	CHIP	1/20W	1K	1	
R6032		ERJ3GEYJ102	CHIP	1/20W	1K	1	
R6033		ERJ3GEYJ102	CHIP	1/20W	1K	1	
R6034		ERJ3GEYJ102	CHIP	1/20W	1K	1	
R6035		ERJ3GEYJ102	CHIP	1/20W	1K	1	
R6036		ERJ3GEYJ102	CHIP	1/20W	1K	1	
R6037		ERJ3GEYJ473	CHIP	1/20W	47K	1	
R6038		ERJ3GEYJ473	CHIP	1/20W	47K	1	
R6039		ERJ3GEYJ333	CHIP	1/20W	33K	1	
R6040		ERJ3GEYJ333	CHIP	1/20W	33K	1	
R6041		ERJ3GEYJ333	CHIP	1/20W	33K	1	
R6042		ERJ3GEYJ473	CHIP	1/20W	47K	1	
R6043		ERJ3GEYJ683	CHIP	1/20W	68K	1	
R6044		ERJ3GEYJ683	CHIP	1/20W	68K	1	
R6045		ERJ3GEYJ391	CHIP	1/20W	390	1	
R6046		ERJ3GEYJ102	CHIP	1/20W	1K	1	
R6047		ERJ3GEYJ683	CHIP	1/20W	68K	1	
R6048		ERJ3GEYJ184	CHIP	1/20W	180K	1	
R6049		ERJ3GEYJ102	CHIP	1/20W	1K	1	
R6050		ERJ3GEYJ102	CHIP	1/20W	1K	1	
R6051		ERJ3GEYJ102	CHIP	1/20W	1K	1	
R6052		ERJ3GEYJ104	CHIP	1/20W	100K	1	
R6053		ERJ3GEYJ104	CHIP	1/20W	100K	1	
R6054		ERJ3GEYJ103	CHIP	1/20W	10K	1	
R6055		ERJ3GEYJ104	CHIP	1/20W	100K	1	
R6056		ERJ3GEYJ104	CHIP	1/20W	100K	1	
R6057		ERJ3GEYJ103	CHIP	1/20W	10K	1	
R6058		ERJ3GEYJ103	CHIP	1/20W	10K	1	
R6059		ERJ3GEYJ104	CHIP	1/20W	100K	1	
R6060		ERJ3GEYJ100	CHIP	1/20W	10	1	
R6061		ERJ3GEYJ473	CHIP	1/20W	47K	1	
R6062		ERJ3GEYJ152	CHIP	1/20W	1.5K	1	
R6063		ERJ3GEYJ822	CHIP	1/20W	8.2K	1	
R6064		ERJ3GEYJ472	CHIP	1/20W	4.7K	1	
R6065		ERJ3GEYJ472	CHIP	1/20W	4.7K	1	
R6066		ERJ3GEYJ104	CHIP	1/20W	100K	1	
R6067		ERJ3GEYJ331	CHIP	1/20W	330	1	
R6068		ERJ3GEYJ392	CHIP	1/20W	3.9K	1	
R6069		ERJ3GEYJ152	CHIP	1/20W	1.5K	1	
R6070		ERJ3GEYJ123	CHIP	1/20W	12K	1	
R6071		ERJ3GEYJ184	CHIP	1/20W	180K	1	
R6073		ERJ3GEYJ154	CHIP	1/20W	150K	1	
R6074		ERJ3GEYJ473	CHIP	1/20W	470K	1	
R6075		ERJ3GEYJ102	CHIP	1/20W	1K	1	
R6076		ERJ3GEYJ102	CHIP	1/20W	1K	1	
R6077		ERJ3GEYJ473	CHIP	1/20W	47K	1	
R6078		ERJ3GEYJ393	CHIP	1/20W	39K	1	
R6079		ERDS2TJ102	C.RESISTOR	1/4W	1K	1	
R6080		ERDS2TJ102	C.RESISTOR	1/4W	1K	1	
R6081		ERDS2TJ102	C.RESISTOR	1/4W	1K	1	

Ref.No.		Part No.	Part Name & Description	Pcs	Remarks
R6082		ERDS2TJ223	C.RESISTOR 1/4W 22K	1	
			SWITCHS		
SW6001		EVQQFQ02K	SWITCH	1	
SW6002		EVQQFQ02K	SWITCH	1	
			TRANSFORMARS		
T1001		ELL10R006	TRANSFORMAR	1	
T4001		EIQ7QF015Q	TRANSFORMAR	1	
T4002		EIQ5QT003Q	TRANSFORMAR	1	
			VARIABLE RESISTORS		
VR1001		EVM7NSX00B53	V.RESISTOR 5K	1	
VR1002		EVM7NSX00B53	V.RESISTOR 5K	1	
VR1003		EVM7NSX00B53	V.RESISTOR 5K	1	
VR2001		EVM7NSX00B15	V.RESISTOR 100K	1	
VR4001		EVM7NSW00B23	V.RESISTOR 2K	1	
VR4002		EVM7NSW00B15	V.RESISTOR 100K	1	
VR6001		EVM7NSW00B24	V.RESISTOR 20K	1	
			CRYSTAL OSCILLATORS		
X1001		VSX0136	CRYSTAL OSCILLATOR	1	
X2001		VSX0154	CRYSTAL OSCILLATOR	1	
X6001		VSX0140	CRYSTAL OSCILLATOR	1	
X6002		VSX0249	CRYSTAL OSCILLATOR	1	
	■	VEP03471B	LUMINANCE/CHROMINANCE		
			C.B.A.		
			CAPACITORS		
C3001		ECEA1CKK100	E.CAPACITOR 16V 10U	1	
C3002		ECUX1E103ZFM	CHIP 25V 0.01U	1	
C3003		ECUX1E104ZFM	CHIP 25V 0.1U	1	
C3004		ECUX1E104ZFM	CHIP 25V 0.1U	1	
C3005		ECUX1E103ZFM	CHIP 25V 0.01U	1	
C3006		ECUX1E103ZFM	CHIP 25V 0.01U	1	
C3007		ECUX1E103ZFM	CHIP 25V 0.01U	1	
C3008		ECUX1E104ZFM	CHIP 25V 0.1U	1	
C3009		ECUX1H680JCM	CHIP 50V 68P	1	
C3011		ECUX1E331KBM	CHIP 25V 330P	1	
C3013		ECUX1E105JCM	CHIP 25V 1U	1	
C3028		ECUX1H820JCM	CHIP 50V 82P	1	
C3030		ECUX1H391KBM	CHIP 50V 390P	1	
C3031		ECUX1H390JCM	CHIP 50V 39P	1	
C3033		ECUX1E220JCM	CHIP 25V 22P	1	
C3034		ECUX1E220JCM	CHIP 25V 22P	1	
C3035		ECUX1E103ZFM	CHIP 25V 0.01U	1	
C3036		ECEA0JKS470	E.CAPACITOR 6.3V 47U	1	
C3037		ECUX1E103ZFM	CHIP 25V 0.01U	1	
C3038		ECUX1H390JCM	CHIP 50V 39P	1	
C3040		ECUX1E101JCM	CHIP 25V 100P	1	
C3041		ECSE1VY104Z	T.CAPACITOR 35V 0.1U	1	
C3042		ECUX1H471KBM	CHIP 50V 470P	1	
C3043		ECUM1H271JV	CHIP 50V 270P	1	
C3044		ECUX1E103ZFM	CHIP 25V 0.01U	1	
C3045		ECEA0JSJ151	E.CAPACITOR 6.3V 150U	1	
C3046		ECUX1H681KBM	CHIP 50V 680P	1	
C3047		ECUM1H221KBV	CHIP 50V 220P	1	

Ref.No.		Part No.	Part Name & Description	Pcs	Remarks
C3049		ECUX1H333ZFN	CHIP 50V 0.033U	1	
C3050		ECUX1E103ZFM	CHIP 25V 0.01U	1	
C3051		ECEA1EKK3R3	E.CAPACITOR 25V 3.3U	1	
C3052		ECEA1CKK100	E.CAPACITOR 16V 10U	1	
C3053		ECEA0JKS220	E.CAPACITOR 6.3V 22U	1	
C3054		ECEA1EKK3R3	E.CAPACITOR 25V 3.3U	1	
C3055		ECEA1EKK2R2	E.CAPACITOR 25V 2.2U	1	
C3057		ECUX1H680JCM	CHIP 50V 68P	1	
C3058		ECUX1C105ZF	CHIP 16V 1U	1	
C3059		ECUX1C105ZF	CHIP 16V 1U	1	
C3060		ECUM1H221KBV	CHIP 50V 220P	1	
C3061		ECUX1H560KBM	CHIP 50V 56P	1	
C3063		ECUX1E270JCM	CHIP 25V 27P	1	
C3065		ECUX1H390JCM	CHIP 50V 39P	1	
C3066		ECUX1H680JCM	CHIP 50V 68P	1	
C3068		ECUX1E103ZFM	CHIP 25V 0.01U	1	
C3069		ECUX1E330JCM	CHIP 25V 33P	1	
C3070		ECUX1H681KBM	CHIP 50V 680P	1	
C3071		ECEA0JKS470	E.CAPACITOR 6.3V 47U	1	
C3072		ECUX1E103ZFM	CHIP 25V 0.01U	1	
C3073		ECUX1C105ZF	CHIP 16V 1U	1	
C3075		ECUX1E103ZFM	CHIP 25V 0.01U	1	
C3077		ECUX1E103ZFM	CHIP 25V 0.01U	1	
C3078		ECUX1E103ZFM	CHIP 25V 0.01U	1	
C3079		ECUX1E103ZFM	CHIP 25V 0.01U	1	
C3080		ECUX1E151JVM	CHIP 25V 150P	1	
C3081		ECUX1E103ZFM	CHIP 25V 0.01U	1	
C3082		ECUX1H681KBM	CHIP 25V 680P	1	
C3083		ECUX1E103ZFM	CHIP 25V 0.01U	1	
C3084		ECUX1E103ZFM	CHIP 25V 0.01U	1	
C3085		ECEA0JSJ151	E.CAPACITOR 6.3V 150U	1	
C3086		ECUX1E103ZFM	CHIP 25V 0.01U	1	
C3087		ECEA1EKK3R3	E.CAPACITOR 25V 3.3U	1	
C3088		ECUX1E103ZFM	CHIP 25V 0.01U	1	
C3089		ECUX1E103ZFM	CHIP 25V 0.01U	1	
C3090		ECUX1E103ZFM	CHIP 25V 0.01U	1	
C3091		ECUX1H560JCM	CHIP 50V 56P	1	
C3092		ECUX1E100CCM	CHIP 25V 10P	1	
C3093		ECUX1E103ZFM	CHIP 25V 0.01U	1	
C3094		ECUX1E103ZFM	CHIP 25V 0.01U	1	
C3097		ECUX1E220JCM	CHIP 25V 22P	1	
C3098		ECUX1E220JCM	CHIP 25V 22P	1	
C3102		ECUX1H560KBM	CHIP 50V 56P	1	
C3105		ECUX1E220JCM	CHIP 25V 22P	1	
C3106		ECUX1E104ZFN	CHIP 25V 0.1U	1	
C3109		ECCF1H050CC	C.CAPACITOR 50V 5P	1	
C8001		ECEA0JKS470	E.CAPACITOR 6.3V 47U	1	
C8002		ECUX1E103ZFM	CHIP 25V 0.01U	1	
C8003		ECUX1E103ZFM	CHIP 25V 0.01U	1	
C8004		ECUX1E103ZFM	CHIP 25V 0.01U	1	
C8005		ECUX1E332KBM	CHIP 25V 3320P	1	
C8006		ECEA0JKS470	E.CAPACITOR 6.3V 47U	1	
C8007		ECUX1E103ZFM	CHIP 25V 0.01U	1	
C8009		ECUX1H680JCM	CHIP 50V 68P	1	
C8010		ECUX1E103ZFM	CHIP 25V 0.01U	1	
C8011		ECUX1E103ZFM	CHIP 25V 0.01U	1	
C8012		ECUX1E103ZFM	CHIP 25V 0.01U	1	
C8013		ECUX1E104ZFM	CHIP 25V 0.1U	1	
C8014		ECUX1E103ZFM	CHIP 25V 0.01U	1	
C8015		ECUM1H223ZFM	CHIP 50V 0.022U	1	
C8016		ECUM1E224ZFM	CHIP 25V 0.22U	1	
C8017		ECUX1E103ZFM	CHIP 25V 0.01U	1	
C8018		ECUX1E103ZFM	CHIP 25V 0.01U	1	
C8019		ECUX1H472ZFM	CHIP 50V 4700P	1	
C8020		ECUX1H470JCM	CHIP 50V 47	1	
C8021		ECUX1E103ZFM	CHIP 25V 0.01U	1	
C8022		ECEA0JKS470	E.CAPACITOR 6.3V 47U	1	
C8023		ECEA1HKK2R2	E.CAPACITOR 50V 2.2U	1	
C8024		ECEA1CKK100	E.CAPACITOR 16V 10U	1	
C8025		ECUX1E102KBM	CHIP 25V 1000P	1	
C8026		ECEA1CKS470	E.CAPACITOR 16V 47U	1	
C8027		ECUX1E103ZFM	CHIP 25V 0.01U	1	
C8028		ECUX1H103ZFN	CHIP 50V 0.01U	1	
C8029		ECEA0JSJ151	E.CAPACITOR 6.3V 150U	1	
C8030		ECUX1E103ZFM	CHIP 25V 0.01U	1	

Ref.No.		Part No.	Part Name & Description			Pcs	Remarks
C8031		ECUX1E102KBM	CHIP	25V	1000P	1	
C8032		ECUM1H030CCV	CHIP	50V	3P	1	
C8033		ECEA0GKS470	E.CAPACITOR	4V	47U	1	
C8034		ECUX1C105ZF	CHIP	16V	1U	1	
C8035		ECUX1E103ZFM	CHIP	25V	0.01U	1	
C8036		ECUX1E103ZFM	CHIP	25V	0.01U	1	
C8037		ECUX1E103ZFM	CHIP	25V	0.01U	1	
C8038		ECUX1E103ZFM	CHIP	25V	0.01U	1	
C8039		ECUX1E103ZFM	CHIP	25V	0.01U	1	
C8040		ECUX1E103ZFM	CHIP	25V	0.01U	1	
C8041		ECUX1E103ZFM	CHIP	25V	0.01U	1	
C8042		ECUX1E103ZFM	CHIP	25V	0.01U	1	
C8043		ECUX1E103ZFM	CHIP	25V	0.01U	1	
C8044		ECUX1C105ZF	CHIP	16V	1U	1	
C8045		ECUXMH100JCV	CHIP	50V	10P	1	
C8050		ECUX1E103ZFM	CHIP	25V	0.01U	1	
C8051		ECEA0JKS470	E.CAPACITOR	6.3V	47U	1	
C8052		ECUX1E103ZFM	CHIP	25V	0.01U	1	
C8053		ECUX1E080CCM	CHIP	25V	8P	1	
C8054		ECUX1E103ZFM	CHIP	25V	0.01U	1	
C8055		ECEA1EKK4R7	E.CAPACITOR	25V	4.7U	1	
C8056		ECUX1E102KBM	CHIP	25V	1000P	1	
C8057		ECUX1H390JCM	CHIP	50V	39P	1	
C8058		ECEA1AKS470	E.CAPACITOR	10V	47U	1	
C8059		ECUX1E103ZFM	CHIP	25V	0.01U	1	
C8060		ECUX1H820JCM	CHIP	50V	82P	1	
C8061		ECEA0JKS470	E.CAPACITOR	6.3V	47U	1	
C8062		ECUX1E103ZFM	CHIP	25V	0.01U	1	
C8063		ECEA0JKS470	E.CAPACITOR	6.3V	47U	1	
C8064		ECUX1E270JCM	CHIP	25V	27P	1	
C8065		ECUX1E220JCM	CHIP	25V	22P	1	
C8066		ECUX1E103ZFM	CHIP	25V	0.01U	1	
C8067		ECUM1H104ZFM	CHIP	50V	0.1U	1	
C8068		ECEA1EKK4R7	E.CAPACITOR	25V	4.7U	1	
C8069		ECEA1CKK100	E.CAPACITOR	16V	10U	1	
C8070		ECUX1C105ZF	CHIP	16V	1U	1	
C8071		ECEA1HKK010	E.CAPACITOR	50V	1U	1	
C8072		ECUX1E103ZFM	CHIP	25V	0.01U	1	
C8073		ECUX1H223ZFN	CHIP	50V	0.022U	1	
C8074		ECUX1E222KBM	CHIP	25V	2200P	1	
C8075		ECUX1E103ZFM	CHIP	25V	0.01U	1	
C8076		ECEA0JKS151	E.CAPACITOR	6.3V	150U	1	
C8077		ECUX1E222KBM	CHIP	25V	2200P	1	
C8078		ECUX1E103ZFM	CHIP	25V	0.01U	1	
C8079		ECUX1E103ZFM	CHIP	25V	0.01U	1	
C8080		ECUX1E332KBM	CHIP	25V	3300P	1	
C8081		ECUX1C105ZF	CHIP	16V	1U	1	
C8082		ECUM1H152KBV	CHIP	50V	1500P	1	
C8083		ECEA1EKK4R7	E.CAPACITOR	25V	4.7U	1	
C8084		ECUX1C105ZF	CHIP	16V	1U	1	
C8085		ECUX1C105ZF	CHIP	16V	1U	1	
C8086		ECUX1E331KBM	CHIP	25V	3300P	1	
C8087		ECUX1E220JCM	CHIP	25V	22P	1	
C8088		ECUX1E103ZFM	CHIP	25V	0.01U	1	
C8089		ECUX1E220JCM	CHIP	25V	22P	1	
C8090		ECUX1E103ZFM	CHIP	25V	0.01U	1	
C8091		ECUX1H680JCM	CHIP	50V	68P	1	
C8092		ECUX1E103ZFM	CHIP	25V	0.01U	1	
C8093		ECUX1E103ZFM	CHIP	25V	0.01U	1	
C8094		ECSE1VY104Z	T.CAPACITOR	35V	0.1U	1	
C8095		ECUX1E103ZFM	CHIP	25V	0.01U	1	
C8096		ECUX1E103ZFM	CHIP	25V	0.01U	1	
			DIODES				
D3001		MA121	DIODE			1	
D3004		MA141K	DIODE			1	
D3007		MA141WK	DIODE			1	
D3008		MA165	DIODE			1	
D3009		MA165	DIODE			1	
D8001		MA141K	DIODE			1	
D8002		MA141K	DIODE			1	
D8005		MA121	DIODE			1	
D8006		MA141K	DIODE			1	

Ref.No.		Part No.	Part Name & Description		Pcs	Remarks
DL3001		EFDCT124A13A	DELAY LINE		1	
			FILTERS			
FL3002		ELB4C005	FILTER		1	
FL3003		VLF0599	FILTER		1	
FL3004		VLF0599	FILTER		1	
FL8001		VLF0625	FILTER		1	
FL8002		ELB4B025	FILTER		1	
FL8003		ELB4B024	FILTER		1	
FL8004		ELB4B010	FILTER		1	
FL8010		VLF0550	FILTER		1	
FL8011		VLF0551	FILTER		1	
			INTEGRATED CIRCUITS			
IC3001		AN3217S	IC		1	
IC3002		AN3321S	IC		1	
IC8001		AN6367S	IC		1	
IC8002		MN6163AS	IC		1	
IC8003		BA7131F	IC		1	
IC8004		MST001MS	IC		1	
IC8005		MSM6989MS	IC		1	
IC8006		AN3592S	IC		1	
			COILS			
L3001		VLQEL05F101K	COIL	100UH	1	
L3002		VLQ0163K8R2	COIL	8.2UH	1	
L3003		VLQ0163K181	COIL	180UH	1	
L3006		VLQEL05F101K	COIL	100UH	1	
L3007		VLQEL04F101K	COIL	100UH	1	
L3009		VLQ0163K151	COIL	150UH	1	
L3010		VLQ0163K150	COIL	15UH	1	
L3011		VLQ0163K270	COIL	270UH	1	
L3012		VLQEL04F101K	COIL	100UH	1	
L3013		VLQ0163K121	COIL	120UH	1	
L3015		VLQ0163K121	COIL	120UH	1	
L3019		VLQ0187K180	COIL	180UH	1	
L3020		VLQ0187K180	COIL	180UH	1	
L3021		VLQEL04F101K	COIL	100UH	1	
L3024		VLQ0163K101	COIL	100UH	1	
L8001		VLQEL04F101K	COIL	100UH	1	
L8002		VLQEL05F681K	COIL	680UH	1	
L8003		VLQEL04F101K	COIL	100UH	1	
L8004		VLQ0163J121	COIL	120UH	1	
L8005		VLQEL04F101K	COIL	100UH	1	
L8006		VLQ0163K150	COIL	15UH	1	
L8007		VLQEL04F101K	COIL	100UH	1	
L8008		VLQEL04F101K	COIL	100UH	1	
L8009		VLQ0163J680	COIL	68UH	1	
L8010		VLQEL05F101K	COIL	100UH	1	
L8011		VLQ0163K100	COIL	10UH	1	
L8012		VLQEL04F101K	COIL	100UH	1	
L8013		VLQ0163K560	COIL	56UH	1	
L8014		VLQEL04F101K	COIL	100UH	1	
L8015		VLQEL04F101K	COIL	100UH	1	
L8016		VLQ0163K330	COIL	33UH	1	
L8017		VLQ0163K100	COIL	10UH	1	
			CONNECTOR			
P3001		VJS2237	CONNECTOR		1	
			TRANSISTORS			
Q3001		2SD1820	TRANSISTOR		1	
Q3002		2SB1219	TRANSISTOR		1	
Q3003		2SC3931	TRANSISTOR		1	

Ref.No.		Part No.	Part Name & Description	Pcs	Remarks
Q3007		2SC3931	TRANSISTOR	1	
Q3008		2SD1819	TRANSISTOR	1	(Q,R)
Q3009		2SD1328	TRANSISTOR	1	
Q3010		2SB1218	TRANSISTOR	1	
Q3020		2SC3931	TRANSISTOR	1	
Q8001		2SC3931	TRANSISTOR	1	
Q8002		2SB1218	TRANSISTOR	1	
Q8003		2SC3931	TRANSISTOR	1	
Q8004		2SC3931	TRANSISTOR	1	
Q8005		2SD1819	TRANSISTOR	1	(Q,R)
Q8010		2SC3931	TRANSISTOR	1	
Q8011		2SD1819	TRANSISTOR	1	
Q8012		XN4601	TRANSISTOR	1	
Q8013		2SD1819	TRANSISTOR	1	
Q8014		2SD1819	TRANSISTOR	1	
Q8015		2SD1819	TRANSISTOR	1	
Q8016		2SD1819	TRANSISTOR	1	
Q8017		2SD1819	TRANSISTOR	1	
Q8018		2SD1819	TRANSISTOR	1	
Q8019		2SD1819	TRANSISTOR	1	
Q8020		2SD1819	TRANSISTOR	1	
Q8022		2SB1218	TRANSISTOR	1	
Q8023		2SC3931	TRANSISTOR	1	
Q8024		2SD1819	TRANSISTOR	1	
			COMBINATION PARTS		
QR3001		UN5213	TRANSISTOR-RESISTOR	1	
QR3002		UN5212	TRANSISTOR-RESISTOR	1	
QR3003		UN5212	TRANSISTOR-RESISTOR	1	
QR3007		UN5213	TRANSISTOR-RESISTOR	1	
QR3008		XN1213	TRANSISTOR-RESISTOR	1	
QR3009		UN5217	TRANSISTOR-RESISTOR	1	
QR3012		XN1213	TRANSISTOR-RESISTOR	1	
QR3015		XN1213	TRANSISTOR-RESISTOR	1	
QR3022		UN5212	TRANSISTOR-RESISTOR	1	
QR3023		XN1213	TRANSISTOR-RESISTOR	1	
QR3025		UN5115	TRANSISTOR-RESISTOR	1	
QR3027		UN5212	TRANSISTOR-RESISTOR	1	
QR3028		UN5213	TRANSISTOR-RESISTOR	1	
QR3029		2SD1819	TRANSISTOR-RESISTOR	1	
QR3030		UN5212	TRANSISTOR-RESISTOR	1	
QR8001		UN5213	TRANSISTOR-RESISTOR	1	
QR8002		UN5213	TRANSISTOR-RESISTOR	1	
QR8003		XN4215	TRANSISTOR-RESISTOR	1	
QR8004		UN5212	TRANSISTOR-RESISTOR	1	
QR8010		UN5212	TRANSISTOR-RESISTOR	1	
QR8011		UN5212	TRANSISTOR-RESISTOR	1	
QR8012		UN5212	TRANSISTOR-RESISTOR	1	
			RESISTORS		
R3001		ERJ3GEYJ392	CHIP 1/20W 3.9K	1	
R3002		ERJ3GEYJ270	CHIP 1/20W 27	1	
R3003		ERJ3GEYJ270	CHIP 1/20W 27	1	
R3004		ERJ3GEYJ392	CHIP 1/20W 3.9K	1	
R3005		ERJ3GEYJ392	CHIP 1/20W 3.9K	1	
R3006		ERJ3GEYJ182	CHIP 1/20W 1.8K	1	
R3007		ERJ3GEYJ393	CHIP 1/20W 39K	1	
R3008		ERJ3GEYJ271	CHIP 1/20W 270	1	
R3009		ERJ3GEYJ682	CHIP 1/20W 6.8K	1	
R3011		ERJ3GEY0R00	CHIP 1/20W 0	1	
R3012		ERJ3GEY0R00	CHIP 1/20W 0	1	
R3013		ERJ3GEYJ121	CHIP 1/20W 120	1	
R3014		ERJ3GEYJ270	CHIP 1/20W 27	1	
R3015		ERJ3GEYJ222	CHIP 1/20W 2.2K	1	
R3016		ERJ3GEYJ331	CHIP 1/20W 330	1	
R3030		ERJ3GEYJ102	CHIP 1/20W 1K	1	
R3034		ERJ3GEYJ102	CHIP 1/20W 1K	1	
R3036		ERJ3GEYJ562	CHIP 1/20W 5.6K	1	
R3037		ERJ3GEYJ182	CHIP 1/20W 1.8K	1	
R3040		ERJ3GEYJ102	CHIP 1/20W 1K	1	
R3041		ERJ3GEYJ102	CHIP 1/20W 1K	1	

Ref.No.		Part No.	Part Name & Description	Pcs	Remarks
R3042		ERJ3GEYJ271	CHIP 1/20W 270	1	
R3043		ERJ3GEY0R00	CHIP 1/20W 0	1	
R3044		ERJ3GEYJ472	CHIP 1/20W 4.7K	1	
R3045		ERJ3GEYJ472	CHIP 1/20W 4.7K	1	
R3046		ERJ3GEYJ102	CHIP 1/20W 1K	1	
R3047		ERJ3GEYJ563	CHIP 1/20W 56K	1	
R3048		ERJ3GEYJ102	CHIP 1/20W 1K	1	
R3049		ERJ3GEYJ122	CHIP 1/20W 1.2K	1	
R3050		ERJ3GEYJ102	CHIP 1/20W 1K	1	
R3051		ERJ3GEYJ824	CHIP 1/20W 820K	1	
R3054		ERJ3GEYJ822	CHIP 1/20W 8.2K	1	
R3057		ERJ3GEYJ222	CHIP 1/20W 2.2K	1	
R3058		ERJ3GEYJ103	CHIP 1/20W 10K	1	
R3059		ERJ3GEYJ563	CHIP 1/20W 56K	1	
R3060		ERJ3GEYJ473	CHIP 1/20W 47K	1	
R3063		ERJ3GEYJ472	CHIP 1/20W 4.7K	1	
R3064		ERJ3GEYJ472	CHIP 1/20W 4.7K	1	
R3065		ERJ3GEYJ101	CHIP 1/20W 100	1	
R3066		ERJ3GEYJ393	CHIP 1/20W 39K	1	
R3067		ERJ3GEYJ271	CHIP 1/20W 270	1	
R3068		ERJ3GEYJ331	CHIP 1/20W 330	1	
R3070		ERJ3GEYJ684	CHIP 1/20W 680K	1	
R3071		ERJ3GEYJ103	CHIP 1/20W 10K	1	
R3072		ERJ3GEYJ103	CHIP 1/20W 10K	1	
R3073		ERJ3GEYJ684	CHIP 1/20W 680K	1	
R3074		ERJ3GEYJ152	CHIP 1/20W 1.5K	1	
R3075		ERJ3GEYJ222	CHIP 1/20W 2.2K	1	
R3076		ERJ3GEYJ101	CHIP 1/20W 100	1	
R3079		ERJ3GEYJ473	CHIP 1/20W 47K	1	
R3081		ERJ3GEYJ102	CHIP 1/20W 1K	1	
R3082		ERJ3GEYJ272	CHIP 1/20W 2.7K	1	
R3084		ERJ3GEYJ562	CHIP 1/20W 5.6K	1	
R3085		ERJ3GEYJ122	CHIP 1/20W 1.2K	1	
R3086		ERJ3GEYJ223	CHIP 1/20W 22K	1	
R3087		ERJ3GEYJ152	CHIP 1/20W 1.5K	1	
R3088		ERJ3GEYJ152	CHIP 1/20W 1.5K	1	
R3089		ERJ3GEYJ271	CHIP 1/20W 270	1	
R3090		ERJ3GEYJ562	CHIP 1/20W 5.6K	1	
R3091		ERJ3GEYJ103	CHIP 1/20W 10K	1	
R3093		ERJ3GEYJ182	CHIP 1/20W 1.8K	1	
R3096		ERJ3GEYJ391	CHIP 1/20W 390	1	
R3097		ERJ3GEYJ391	CHIP 1/20W 390	1	
R3099		ERDS2TJ472	C.RESISTOR 1/4W 4.7K	1	
R3103		ERJ3GEYJ223	CHIP 1/20W 22K	1	
R3104		ERJ3GEYJ103	CHIP 1/20W 10K	1	
R3105		ERJ3GEYJ151	CHIP 1/20W 150	1	
R3106		ERJ3GEYJ471	CHIP 1/20W 470	1	
R3107		ERJ3GEYJ121	CHIP 1/20W 120	1	
R3108		ERJ3GEYJ222	CHIP 1/20W 2.2K	1	
R3110		ERJ3GEYJ182	CHIP 1/20W 1.8K	1	
R3112		ERJ3GEYJ182	CHIP 1/20W 1.8K	1	
R3114		ERJ3GEYJ122	CHIP 1/20W 1.2K	1	
R3115		ERJ3GEYJ122	CHIP 1/20W 1.2K	1	
R3116		ERJ3GEYJ122	CHIP 1/20W 1.2K	1	
R3117		ERJ3GEYJ103	CHIP 1/20W 10K	1	
R3118		ERJ3GEYJ103	CHIP 1/20W 10K	1	
R3123		ERJ3GEYJ102	CHIP 1/20W 1K	1	
R3124		ERJ3GEYJ333	CHIP 1/20W 33K	1	
R3125		ERJ3GEYJ823	CHIP 1/20W 82K	1	
R3127		ERJ3GEYJ153	CHIP 1/20W 15K	1	
R3131		ERJ3GEYJ182	CHIP 1/20W 1.8K	1	
R3133		ERJ3GEYJ221	CHIP 1/20W 220	1	
R3140		ERJ3GEYJ223	CHIP 1/20W 22K	1	
R8001		ERJ3GEYJ102	CHIP 1/20W 1K	1	
R8002		ERJ3GEYJ102	CHIP 1/20W 1K	1	
R8003		ERJ3GEYJ820	CHIP 1/20W 82	1	
R8004		ERJ3GEYJ102	CHIP 1/20W 1K	1	
R8005		ERJ3GEYJ273	CHIP 1/20W 27K	1	
R8006		ERJ3GEYJ102	CHIP 1/20W 1K	1	
R8007		ERJ3GEYJ102	CHIP 1/20W 1K	1	
R8008		ERJ3GEYJ102	CHIP 1/20W 1K	1	
R8009		ERJ3GEYJ682	CHIP 1/20W 6.8K	1	
R8010		ERJ3GEYJ333	CHIP 1/20W 33K	1	
R8011		ERJ3GEYJ272	CHIP 1/20W 2.7K	1	
R8012		ERJ3GEYJ821	CHIP 1/20W 820	1	

Ref.No.		Part No.	Part Name & Description	Pcs	Remarks
R8013		ERJ3GEYJ472	CHIP 1/20W 4.7K	1	
R8014		ERJ3GEYJ273	CHIP 1/20W 27K	1	
R8015		ERJ3GEYJ103	CHIP 1/20W 10K	1	
R8016		ERJ3GEYJ470	CHIP 1/20W 47	1	
R8017		ERJ3GEYJ123	CHIP 1/20W 12K	1	
R8018		ERJ3GEYJ102	CHIP 1/20W 1K	1	
R8019		ERJ3GEYJ182	CHIP 1/20W 1.8K	1	
R8020		ERJ3GEYJ102	CHIP 1/20W 1K	1	
R8021		ERJ3GEY0R00	CHIP 1/20W 0	1	
R8022		ERJ3GEYJ272	CHIP 1/20W 2.7K	1	
R8023		ERJ3GEYJ271	CHIP 1/20W 270	1	
R8024		ERJ3GEY0R00	CHIP 1/20W 0	1	
R8025		ERJ3GEYJ122	CHIP 1/20W 1.2K	1	
R8026		ERJ3GEYJ102	CHIP 1/20W 1K	1	
R8027		ERJ3GEYJ183	CHIP 1/20W 18K	1	
R8028		ERJ3GEYJ123	CHIP 1/20W 12K	1	
R8029		ERJ3GEYJ331	CHIP 1/20W 330	1	
R8030		ERJ3GEYJ390	CHIP 1/20W 39	1	
R8031		ERJ3GEYJ102	CHIP 1/20W 1K	1	
R8032		ERJ3GEYJ223	CHIP 1/20W 22K	1	
R8033		ERJ3GEYJ102	CHIP 1/20W 1K	1	
R8034		ERJ3GEYJ122	CHIP 1/20W 1.2K	1	
R8035		ERJ3GEYJ822	CHIP 1/20W 8.2K	1	
R8036		ERJ3GEYJ562	CHIP 1/20W 5.6K	1	
R8038		ERJ3GEYJ105	CHIP 1/20W 1M	1	
R8039		ERJ8GCYJ682	CHIP 1/8W 6.8K	1	
R8040		ERJ3GEYJ822	CHIP 1/20W 8.2K	1	
R8041		ERJ3GEY0R00	CHIP 1/20W 0	1	
R8045		ERJ3GEYJ392	CHIP 1/20W 3.9K	1	
R8046		ERJ3GEYJ391	CHIP 1/20W 390	1	
R8047		ERJ3GEYJ122	CHIP 1/20W 1.2K	1	
R8048		ERJ3GEYJ681	CHIP 1/20W 680	1	
R8049		ERJ3GEYJ103	CHIP 1/20W 10K	1	
R8050		ERJ3GEYJ223	CHIP 1/20W 22K	1	
R8051		ERJ3GEYJ681	CHIP 1/20W 680	1	
R8052		ERJ3GEYJ122	CHIP 1/20W 1.2K	1	
R8053		ERJ3GEYJ561	CHIP 1/20W 560	1	
R8054		ERJ3GEYJ221	CHIP 1/20W 220	1	
R8055		ERJ3GEYJ221	CHIP 1/20W 220	1	
R8056		ERJ3GEYJ102	CHIP 1/20W 1K	1	
R8057		ERJ3GEYJ102	CHIP 1/20W 1K	1	
R8058		ERJ3GEYJ681	CHIP 1/20W 680	1	
R8059		ERJ3GEYJ223	CHIP 1/20W 22K	1	
R8060		ERJ3GEYJ123	CHIP 1/20W 1.2K	1	
R8061		ERJ3GEYJ122	CHIP 1/20W 1.2K	1	
R8062		ERJ3GEYJ102	CHIP 1/20W 1K	1	
R8063		ERJ3GEYJ103	CHIP 1/20W 10K	1	
R8064		ERJ3GEYJ393	CHIP 1/20W 39K	1	
R8065		ERJ3GEYJ221	CHIP 1/20W 220	1	
R8066		ERJ3GEYJ154	CHIP 1/20W 150K	1	
R8067		ERJ3GEYJ103	CHIP 1/20W 10K	1	
R8068		ERJ3GEYJ223	CHIP 1/20W 22K	1	
R8069		ERJ3GEYJ123	CHIP 1/20W 12K	1	
R8070		ERJ3GEYJ104	CHIP 1/20W 100K	1	
R8071		ERJ3GEYJ391	CHIP 1/20W 390	1	
R8072		ERJ3GEYJ332	CHIP 1/20W 3.3K	1	
R8073		ERJ3GEYJ821	CHIP 1/20W 820	1	
R8074		ERJ3GEYJ102	CHIP 1/20W 1K	1	
R8075		ERJ3GEYJ473	CHIP 1/20W 47K	1	
R8076		ERJ3GEYJ473	CHIP 1/20W 47K	1	
R8077		ERJ3GEYJ821	CHIP 1/20W 820	1	
R8078		ERJ3GEYJ272	CHIP 1/20W 2.7K	1	
R8079		ERJ3GEYJ222	CHIP 1/20W 2.2K	1	
R8080		ERJ3GEYJ473	CHIP 1/20W 47K	1	
R8081		ERJ3GEYJ222	CHIP 1/20W 2.2K	1	
R8082		ERJ3GEYJ561	CHIP 1/20W 560	1	
R8083		ERJ3GEYJ561	CHIP 1/20W 560	1	
R8084		ERJ3GEYJ223	CHIP 1/20W 22K	1	
R8085		ERJ3GEYJ393	CHIP 1/20W 39K	1	
R8086		ERJ3GEYJ471	CHIP 1/20W 470	1	
R8087		ERJ3GEYJ103	CHIP 1/20W 10K	1	
R8088		ERJ3GEYJ222	CHIP 1/20W 2.2K	1	
R8089		ERJ3GEYJ562	CHIP 1/20W 5.6K	1	
R8090		ERJ3GEYJ104	CHIP 1/20W 100K	1	
R8091		ERJ3GEYJ203	CHIP 1/20W 20K	1	

Ref.No.		Part No.	Part Name & Description	Pcs	Remarks
R8092		ERJ3GEYJ104	CHIP 1/20W 100K	1	
R8093		ERJ3GEYJ123	CHIP 1/20W 12K	1	
R8094		ERJ3GEYJ104	CHIP 1/20W 100K	1	
R8095		ERJ3GEYJ123	CHIP 1/20W 12K	1	
R8096		ERJ3GEYJ562	CHIP 1/20W 5.6K	1	
R8097		ERJ3GEYJ105	CHIP 1/20W 1M	1	
R8098		ERJ3GEYJ103	CHIP 1/20W 10K	1	
R8099		ERJ3GEYJ103	CHIP 1/20W 10K	1	
R8100		ERJ3GEYJ103	CHIP 1/20W 10K	1	
R8101		ERJ3GEYJ103	CHIP 1/20W 10K	1	
R8102		ERJ3GEYJ393	CHIP 1/20W 39K	1	
R8103		ERJ3GEYJ473	CHIP 1/20W 47K	1	
R8104		ERJ3GEYJ222	CHIP 1/20W 2.2K	1	
R8105		ERJ3GEYJ105	CHIP 1/20W 1M	1	
R8106		ERJ3GEYJ562	CHIP 1/20W 5.6K	1	
R8107		ERJ3GEYJ681	CHIP 1/20W 680	1	
R8108		ERJ3GEYJ122	CHIP 1/20W 1.2K	1	
R8109		ERJ3GEYJ101	CHIP 1/20W 100	1	
			THERMISTER		
TH3001		ERTD2FIK154S	THERMISTER	1	
			VARIABLE RESISTORS		
VR3001		EVM7NSX00B23	V.RESISTOR 2K	1	
VR3003		EVM7NSW00B54	V.RESISTOR 50K	1	
VR3004		EVM7NSW00B54	V.RESISTOR 50K	1	
VR3006		EVM7NSW00B14	V.RESISTOR 10K	1	
VR3007		EVM7NSW00B14	V.RESISTOR 10K	1	
VR3009		EVM7NSW00B54	V.RESISTOR 50K	1	
VR3010		EVM7NSX00B13	V.RESISTOR 1K	1	
VR3012		EVM7NSX00B54	V.RESISTOR 50K	1	
VR3013		EVM7NSW00B23	V.RESISTOR 2K	1	
VR8001		EVM7NSX00B13	V.RESISTOR 1K	1	
VR8002		EVM7NSX00B54	V.RESISTOR 50K	1	
VR8005		EVM7NSW00B14	V.RESISTOR 10K	1	
VR8006		EVM7NSX00B54	V.RESISTOR 50K	1	
VR8007		EVM7NSW00B23	V.RESISTOR 2K	1	
			CHRISTAL OSCILLATOR		
X8001		VSX0188	CHRISTAL OSCILLATOR	1	

Ref.No.		Part No.	Part Name & Description	Pcs	Remarks
	■	VEP02297A	DRIVE C.B.A.		
			CAPACITORS		
C2601		ECEA1CKS470	E.CAPACITOR 16V 47U	1	
C2602		ECUX1E103ZFM	CHIP 25V 0.01U	1	
C2603		ECUX1E103ZFM	CHIP 25V 0.01U	1	
C2604		ECUX1E103ZFM	CHIP 25V 0.01U	1	
C2605		ECEA1EKK2R2	E.CAPACITOR 25V 2.2U	1	
C2606		ECEA1EKK2R2	E.CAPACITOR 25V 2.2U	1	
C2607		ECEA1EKK2R2	E.CAPACITOR 25V 2.2U	1	
C2608		ECUX1E103ZFM	CHIP 25V 0.01U	1	
C2609		ECUX1E104ZFN	CHIP 25V 0.1U	1	
C2610		ECEA1CKK4R7	E.CAPACITOR 16V 4.7U	1	
C2611		ECUX1E104ZFN	CHIP 25V 0.1U	1	
C2612		ECEA1CKS470	E.CAPACITOR 16V 47U	1	
C2613		ECUX1E104ZFM	CHIP 25V 0.1U	1	
C2614		ECUX1E104ZFM	CHIP 25V 0.1U	1	
C2615		ECUX1E103ZFM	CHIP 25V 0.01U	1	
C2616		ECUX1E104ZFN	CHIP 25V 0.1U	1	
C2617		ECEA0JKS470	E.CAPACITOR 6.3V 47U	1	
C2618		ECUX1E104ZFN	CHIP 25V 0.1U	1	
C2619		ECEA1EKK2R2	E.CAPACITOR 25V 2.2U	1	
C2620		ECEA1EKK2R2	E.CAPACITOR 25V 2.2U	1	
C2621		ECEA1EKK2R2	E.CAPACITOR 25V 2.2U	1	
C2622		ECUX1E333ZFN	CHIP 25V 0.033U	1	
C2623		ECUX1E333ZFN	CHIP 25V 0.033U	1	
C2624		ECUX1E333ZFN	CHIP 25V 0.033U	1	
C2625		ECUX1E333ZFN	CHIP 25V 0.033U	1	
C2626		ECUX1E333ZFN	CHIP 25V 0.033U	1	
C2627		ECUX1E333ZFN	CHIP 25V 0.033U	1	
C2628		ECEA1AKS470	E.CAPACITOR 10V 47U	1	
C2629		ECUX1E104ZFN	CHIP 25V 0.1U	1	
C2630		ECUX1E103ZFM	CHIP 25V 0.01U	1	
			DIODES		
D2601		MA151WK	DIODE	1	
D2602		MA151K	DIODE	1	
			INTEGRATED CIRCUITS		
IC2601		TA8402F	IC	1	
IC2602		BA6431F	IC	1	
IC2603		ON2170	IC	1	
			CONNECTORS		
P2601		VJP2245	CONNECTOR (MALE)	1	
P2602		VJS2138	CONNECTOR	1	
P2603		VJS2325	CONNECTOR	1	
P2604		VJP2260	CONNECTOR (MALE)	1	
			TRANSISTORS		
Q2601		2SB819	TRANSISTOR	1	(Q,R)
Q2602		2SB819	TRANSISTOR	1	(Q,R)
Q2603		2SB819	TRANSISTOR	1	(Q,R)
Q2604		2SD601	TRANSISTOR	1	

Ref.No.		Part No.	Part Name & Description	Pcs	Remarks
			RESISTORS		
R2601		ERJ3GEYJ103	CHIP 1/20W 10K	1	
R2602		ERJ3GEYJ103	CHIP 1/20W 10K	1	
R2603		ERJ3GEYJ103	CHIP 1/20W 10K	1	
R2604		ERDS2TJ1R8	C.RESISTOR 1/4W 1.8	1	
R2605		ERDS2TJ1R8	C.RESISTOR 1/4W 1.8	1	
R2606		ERJ3GEYJ472	CHIP 1/20W 4.7K	1	
R2607		ERJ3GEYJ563	CHIP 1/20W 56K	1	
R2608		ERJ3GEYJ330	CHIP 1/20W 33K	1	
R2609		ERJ3GEYJ330	CHIP 1/20W 33K	1	
R2610		ERJ3GEYJ330	CHIP 1/20W 33K	1	
R2611		ERDS2TJR68	C.RESISTOR 1/4W 0.68	1	
R2612		ERJ6GMYJ221	CHIP 1/16W 220	1	
R2613		ERJ3GEYJ103	CHIP 1/20W 10K	1	
R2614		ERJ3GEYJ103	CHIP 1/20W 10K	1	
R2615		ERJ3GEYJ151	CHIP 1/20W 150	1	
R2616		ERJ3GEYJ271	CHIP 1/20W 270	1	
R2617		ERDS2TJ101	C.RESISTOR 1/4W 100	1	
R2618		ERJ3GEYJ331	CHIP 1/20W 330	1	
R2619		ERDS2TJ2R2	C.RESISTOR 1/4W 2.2	1	
			COMBINATION PARTS		
Z2601		VMZ1092		1	
	■	VEP05112B	SP HEAD AMP C.B.A.		
			CAPACITORS		
C5001		ECUX1C105ZF	CHIP 16V 1U	1	
C5002		ECUX1H473ZFN	CHIP 50V 0.047U	1	
C5003		ECUX1C105ZF	CHIP 16V 1U	1	
C5004		ECUX1H473ZFN	CHIP 50V 0.047U	1	
C5005		ECUX1C105ZF	CHIP 16V 1U	1	
C5006		ECUX1H473ZFN	CHIP 50V 0.047U	1	
C5007		ECUX1C105ZF	CHIP 16V 1U	1	
C5008		ECUX1H473ZFN	CHIP 50V 0.047U	1	
C5009		ECEA0JKS470	E.CAPACITOR 6.3V 47U	1	
C5010		ECUX1E103ZFM	CHIP 25V 0.01U	1	
C5011		ECUX1C105ZF	CHIP 16V 1U	1	
C5012		ECUX1H470JCM	CHIP 50V 47P	1	
C5013		ECUX1E103ZFM	CHIP 25V 0.01U	1	
C5014		ECUX1H470JCM	CHIP 50V 47P	1	
C5015		ECUX1E103ZFM	CHIP 25V 0.01U	1	
C5016		ECUX1C105ZF	CHIP 16V 1U	1	
C5017		ECUX1C105ZF	CHIP 16V 1U	1	
C5018		ECUX1H470JCM	CHIP 50V 47P	1	
C5019		ECUX1E103ZFM	CHIP 25V 0.01U	1	
C5020		ECUX1H470JCM	CHIP 50V 47P	1	
C5021		ECUX1E103ZFM	CHIP 25V 0.01U	1	
C5022		ECUX1C105ZF	CHIP 16V 1U	1	
C5023		ECUX1C105ZF	CHIP 16V 1U	1	
C5024		ECUX1E151JVM	CHIP 25V 150	1	
C5025		ECUX1E270JCM	CHIP 25V 27	1	
C5026		ECUX1E103ZFM	CHIP 25V 0.01U	1	
C5027		ECUX1E103ZFM	CHIP 25V 0.01U	1	
C5029		ECUX1E102JCM	CHIP 25V 1000P	1	
C5030		ECUX1E151JVM	CHIP 25V 150P	1	
C5031		ECUX1H390JCM	CHIP 50V 39P	1	
C5032		ECUX1E103ZFM	CHIP	1	
C5033		ECUX1E103ZFM	CHIP	1	

Ref.No.		Part No.	Part Name & Description	Pcs	Remarks
C5034		ECUX1E103ZFM	CHIP	1	
C5035		ECUX1E103ZFM	CHIP	1	
C5036		ECUX1E103ZFM	CHIP	1	
C5037		ECUX1E103ZFM	CHIP	1	
C5038		ECUX1E103ZFM	CHIP	1	
C5039		ECUX1E103ZFM	CHIP	1	
			INTEGRATED CIRCUIT		
IC5001		AN3311S	IC	1	
			COILS		
L5001		VLQEL04F101K	COIL 100UH	1	
L5002		VLQ0163K330	COIL 33UH	1	
L5003		VLQ0163K180	COIL 18UH	1	
L5004		VLQ0163K100	COIL 10UH	1	
L5005		VLQEL04F120K	COIL 12UH	1	
			CONNECTORS		
P5001		VJP2243	CONNECTOR (MALE)	1	
P5002		VJS2236	CONNECTOR	1	
P5003		VJP2260	CONNECTOR (MALE)	1	
			TRANSISTORS		
Q5001		XN1401	TRANSISTOR	1	
Q5002		2SD1328	TRANSISTOR	1	
Q5003		2SD1328	TRANSISTOR	1	
Q5004		2SD1328	TRANSISTOR	1	
Q5005		2SD1328	TRANSISTOR	1	
Q5006		XN1401	TRANSISTOR	1	
Q5007		2SD1328	TRANSISTOR	1	
Q5008		2SD1328	TRANSISTOR	1	
Q5009		2SD1328	TRANSISTOR	1	
Q5010		2SD1328	TRANSISTOR	1	
Q5011		2SB1218	TRANSISTOR	1	
Q5012		2SA812	TRANSISTOR	1	
Q5013		2SA1175	TRANSISTOR	1	
			COMBINATION PARTS		
QR5001		XN1213	TRANSISTOR-RESISTOR	1	
QR5002		XN1213	TRANSISTOR-RESISTOR	1	
QR5004		XN1113	TRANSISTOR-RESISTOR	1	
QR5005		XN1113	TRANSISTOR-RESISTOR	1	
			RESISTORS		
R5001		ERJ3GEYJ152	CHIP 1/20W 1.5K	1	
R5002		ERJ3GEYJ102	CHIP 1/20W 1K	1	
R5003		ERJ3GEYJ272	CHIP 1/20W 2.7K	1	
R5004		ERJ3GEYJ332	CHIP 1/20W 3.3K	1	
R5005		ERJ3GEYJ332	CHIP 1/20W 3.3K	1	
R5006		ERJ3GEYJ332	CHIP 1/20W 3.3K	1	
R5007		ERJ3GEYJ152	CHIP 1/20W 1.5K	1	
R5008		ERJ3GEYJ102	CHIP 1/20W 1K	1	
R5009		ERJ3GEYJ272	CHIP 1/20W 2.7K	1	
R5010		ERJ3GEYJ332	CHIP 1/20W 3.3K	1	
R5011		ERJ3GEYJ332	CHIP 1/20W 3.3K	1	
R5012		ERJ3GEYJ332	CHIP 1/20W 3.3K	1	
R5013		ERJ3GEYJ100	CHIP 1/20W 10	1	
R5014		ERJ3GEYJ152	CHIP 1/20W 1.5K	1	
R5015		ERJ3GEYJ102	CHIP 1/20W 1K	1	
R5016		ERJ3GEYJ272	CHIP 1/20W 2.7K	1	
R5017		ERJ3GEYJ332	CHIP 1/20W 3.3K	1	
R5018		ERJ3GEYJ332	CHIP 1/20W 3.3K	1	
R5019		ERJ3GEYJ332	CHIP 1/20W 3.3K	1	
R5020		ERJ3GEYJ152	CHIP 1/20W 1.5K	1	
R5021		ERJ3GEYJ102	CHIP 1/20W 1K	1	
R5022		ERJ3GEYJ272	CHIP 1/20W 2.7K	1	
R5023		ERJ3GEYJ332	CHIP 1/20W 3.3K	1	

Ref.No.		Part No.	Part Name & Description	Pcs	Remarks
R5024		ERJ3GEYJ332	CHIP 1/20W 3.3K	1	
R5025		ERJ3GEYJ332	CHIP 1/20W 3.3K	1	
R5026		ERJ3GEYJ103	CHIP 1/20W 10K	1	
R5027		ERJ3GEYJ182	CHIP 1/20W 1.8K	1	
R5028		ERJ3GEYJ182	CHIP 1/20W 1.8K	1	
R5029		ERJ3GEYJ182	CHIP 1/20W 1.8K	1	
R5030		ERJ3GEYJ182	CHIP 1/20W 1.8K	1	
R5031		ERJ3GEYJ103	CHIP 1/20W 10K	1	
R5032		ERJ3GEYJ681	CHIP 1/20W 680	1	
R5033		ERJ3GEYJ182	CHIP 1/20W 1.8K	1	
R5034		ERJ3GEYJ102	CHIP 1/20W 1K	1	
R5035		ERJ3GEYJ152	CHIP 1/20W 1.5K	1	
R5037		ERJ3GEYJ822	CHIP 1/20W 8.2K	1	
R5038		ERJ3GEYJ391	CHIP 1/20W 390	1	
R5039		ERJ3GEYJ271	CHIP 1/20W 270	1	
R5040		ERJ8GCYJ4R7	CHIP 1/8W 4.7	1	
R5041		ERJ3GEYJ473	CHIP 1/20W 47K	1	
R5042		ERJ3GEYJ473	CHIP 1/20W 47K	1	
R5043		ERJ3GEYJ473	CHIP 1/20W 47K	1	
R5044		ERJ3GEYJ473	CHIP 1/20W 47K	1	
R5045		ERJ3GEYJ471	CHIP 1/20W 470	1	
R5046		ERJ3GEYJ471	CHIP 1/20W 470	1	
R5047		ERJ3GEYJ471	CHIP 1/20W 470	1	
R5048		ERJ3GEYJ471	CHIP 1/20W 470	1	
	■	VEP05115B	LP HEAD AMP C.B.A.		
			CAPACITORS		
C5501		ECUX1C105ZF	CHIP 16V 1U	1	
C5502		ECUX1H473ZFN	CHIP 50V 0.047U	1	
C5503		ECUX1C105ZF	CHIP 16V 1U	1	
C5504		ECUX1H473ZFN	CHIP 50V 0.047U	1	
C5505		ECUX1C105ZF	CHIP 16V 1U	1	
C5506		ECUX1H473ZFN	CHIP 50V 0.047U	1	
C5507		ECUX1C105ZF	CHIP 16V 1U	1	
C5508		ECUX1H473ZFN	CHIP 50V 0.047U	1	
C5509		ECEA0JKS470	E.CAPACITOR 6.3V 47U	1	
C5510		ECUX1E103ZFM	CHIP 25V 0.01U	1	
C5511		ECUX1C105ZF	CHIP 16V 1U	1	
C5512		ECUX1H390JCM	CHIP 50V 47P	1	
C5513		ECUX1E103ZFM	CHIP 25V 0.01U	1	
C5514		ECUX1H390JCM	CHIP 50V 39P	1	
C5515		ECUX1E103ZFM	CHIP 25V 0.01U	1	
C5516		ECUX1C105ZF	CHIP 16V 1U	1	
C5517		ECUX1C105ZF	CHIP 16V 1U	1	
C5518		ECUX1H390JCM	CHIP 50V 39P	1	
C5519		ECUX1E103ZFM	CHIP 25V 0.01U	1	
C5520		ECUX1H390JCM	CHIP 50V 39P	1	
C5521		ECUX1E103ZFM	CHIP 25V 0.01U	1	
C5522		ECUX1C105ZF	CHIP 16V 1U	1	
C5523		ECUX1C105ZF	CHIP 16V 1U	1	
C5524		ECUX1H470JCM	CHIP 50V 47P	1	
C5525		ECUX1E105JCM	CHIP 25V 1U	1	
C5526		ECUX1E103ZFM	CHIP 25V 0.01U	1	
C5527		ECUX1E103ZFM	CHIP 25V 0.01U	1	
C5528		ECUX1E103ZFM	CHIP 25V 0.01U	1	
C5529		ECUX1E103ZFM	CHIP 25V 0.01U	1	
C5530		ECUX1E103ZFM	CHIP 25V 0.01U	1	
C5531		ECUX1E103ZFM	CHIP 25V 0.01U	1	
C5532		ECUX1E103ZFM	CHIP 25V 0.01U	1	
C5533		ECUX1E103ZFM	CHIP 25V 0.01U	1	

Ref.No.		Part No.	Part Name & Description	Pcs	Remarks
			INTEGRATED CIRCUITS		
IC5501		AN3311S	IC	1	
			COILS		
L5501		VLQEL04F101K	COIL 100UH	1	
L5502		VLQ0163K220	COIL 22UH	1	
L5503		VLQ0163K390	COIL 39UH	1	
			CONNECTORS		
P5501		VJP2281	CONNECTOR (MALE)	1	
P5502		VJS2118	CONNECTOR	1	
P5503		VJP2271	CONNECTOR (MALE)	1	
			TRANSISTORS		
Q5501		XN1401	TRANSISTOR	1	
Q5502		2SD1328	TRANSISTOR	1	
Q5503		2SD1328	TRANSISTOR	1	
Q5504		2SD1328	TRANSISTOR	1	
Q5505		2SD1328	TRANSISTOR	1	
Q5506		XN1401	TRANSISTOR	1	
Q5507		2SD1328	TRANSISTOR	1	
Q5508		2SD1328	TRANSISTOR	1	
Q5509		2SD1328	TRANSISTOR	1	
Q5510		2SD1328	TRANSISTOR	1	
Q5511		2SB1218	TRANSISTOR	1	
			COMBINATION PARTS		
QR5501		XN1213	TRANSISTOR-RESISTOR	1	
QR5502		XN1213	TRANSISTOR-RESISTOR	1	
QR5504		XN1113	TRANSISTOR-RESISTOR	1	
QR5505		XN1113	TRANSISTOR-RESISTOR	1	
			RESISTORS		
R5501		ERJ3GEYJ152	CHIP 1/20W 1.5K	1	
R5502		ERJ3GEYJ102	CHIP 1/20W 1K	1	
R5503		ERJ3GEYJ272	CHIP 1/20W 2.7K	1	
R5504		ERJ3GEYJ332	CHIP 1/20W 3.3K	1	
R5505		ERJ3GEYJ332	CHIP 1/20W 3.3K	1	
R5506		ERJ3GEYJ473	CHIP 1/20W 47K	1	
R5507		ERJ3GEYJ152	CHIP 1/20W 1.5K	1	
R5508		ERJ3GEYJ102	CHIP 1/20W 1K	1	
R5509		ERJ3GEYJ272	CHIP 1/20W 2.7K	1	
R5510		ERJ3GEYJ332	CHIP 1/20W 3.3K	1	
R5511		ERJ3GEYJ332	CHIP 1/20W 3.3K	1	
R5512		ERJ3GEYJ473	CHIP 1/20W 47K	1	
R5513		ERJ3GEYJ100	CHIP 1/20W 10	1	
R5514		ERJ3GEYJ152	CHIP 1/20W 1.5K	1	
R5515		ERJ3GEYJ102	CHIP 1/20W 1K	1	
R5516		ERJ3GEYJ272	CHIP 1/20W 2.7K	1	
R5517		ERJ3GEYJ332	CHIP 1/20W 3.3K	1	
R5518		ERJ3GEYJ332	CHIP 1/20W 3.3K	1	
R5519		ERJ3GEYJ473	CHIP 1/20W 47K	1	
R5520		ERJ3GEYJ152	CHIP 1/20W 1.5K	1	
R5521		ERJ3GEYJ102	CHIP 1/20W 1K	1	
R5522		ERJ3GEYJ272	CHIP 1/20W 2.7K	1	
R5523		ERJ3GEYJ332	CHIP 1/20W 3.3K	1	
R5524		ERJ3GEYJ332	CHIP 1/20W 3.3K	1	
R5525		ERJ3GEYJ473	CHIP 1/20W 47K	1	
R5526		ERJ3GEYJ103	CHIP 1/20W 10K	1	
R5527		ERJ3GEYJ182	CHIP 1/20W 1.8K	1	
R5528		ERJ3GEYJ182	CHIP 1/20W 1.8K	1	
R5529		ERJ3GEYJ182	CHIP 1/20W 1.8K	1	
R5530		ERJ3GEYJ182	CHIP 1/20W 1.8K	1	
R5531		ERJ3GEYJ103	CHIP 1/20W 10K	1	
R5532		ERJ3GEYJ681	CHIP 1/20W 680	1	
R5533		ERJ3GEYJ182	CHIP 1/20W 1.8K	1	

Ref.No.		Part No.	Part Name & Description	Pcs	Remarks
R5534		ERJ3GEYJ102	CHIP 1/20W 1K	1	
R5535		ERJ3GEYJ152	CHIP 1/20W 1.5K	1	
R5536		ERJ3GEYJ332	CHIP 1/20W 3.3K	1	
R5537		ERJ3GEYJ332	CHIP 1/20W 3.3K	1	
R5538		ERJ3GEYJ332	CHIP 1/20W 3.3K	1	
R5539		ERJ3GEYJ332	CHIP 1/20W 3.3K	1	
R5540		ERJ3GEYJ471	CHIP 1/20W 470	1	
R5541		ERJ3GEYJ471	CHIP 1/20W 470	1	
R5542		ERJ3GEYJ471	CHIP 1/20W 470	1	
R5543		ERJ3GEYJ471	CHIP 1/20W 470	1	
	■	VEP06444B	VTR OPERATION C.B.A.		
			DIODES		
D6301		MA165	DIODE	1	
D6304		MA165	DIODE	1	
D6305		MA165	DIODE	1	
D6306		MA165	DIODE	1	
D6307		MA165	DIODE	1	
D6308		MA165	DIODE	1	
D6309		MA165	DIODE	1	
D6310		MA165	DIODE	1	
D6311		MA165	DIODE	1	
D6312		MA165	DIODE	1	
D6313		LN247RCALULF	LED	1	
D6314		LN247RCALULF	LED	1	
D6315		LN247RCALULF	LED	1	
D6316		LN247RCALULF	LED	1	
D6317		LN247RCALULF	LED	1	
D6318		LN247RCALULF	LED	1	
D6319		LN247RCALULF	LED	1	
D6321		MA165	DIODE	1	
			CONNECTORS		
P6301		VJP2245	CONNECTOR (MALE)	1	
P6302		VJP1607T	CONNECTOR (MALE)	1	
			COMBINATION PARTS		
QR6301		UN1114	TRANSISTOR-RESISTOR	1	
			RESISTORS		
R6301		ERDS2TJ331	C.RESISTOR 1/4W 330	1	
R6302		ERDS2TJ331	C.RESISTOR 1/4W 330	1	
R6303		ERDS2TJ331	C.RESISTOR 1/4W 330	1	
R6304		ERDS2TJ331	C.RESISTOR 1/4W 330	1	
R6305		ERDS2TJ331	C.RESISTOR 1/4W 330	1	
R6306		ERDS2TJ331	C.RESISTOR 1/4W 330	1	
R6307		ERDS2TJ331	C.RESISTOR 1/4W 330	1	
R6308		ERDS2TJ391	C.RESISTOR 1/4W 390	1	
SW6301		VSS0126	SWITCH	1	
SW6304		EVQQFQ02K	SWITCH	1	
SW6305		EVQQFQ02K	SWITCH	1	
SW6306		EVQQFQ02K	SWITCH	1	
SW6307		EVQQFQ02K	SWITCH	1	
SW6308		EVQQFQ02K	SWITCH	1	

Ref.No.		Part No.	Part Name & Description	Pcs	Remarks
SW6309		EVQQFQ02K	SWITCH	1	
SW6310		EVQQFQ02K	SWITCH	1	
SW6311		EVQQFQ02K	SWITCH	1	
SW6312		EVQQFQ02K	SWITCH	1	
SW6313		EVQQFQ02K	SWITCH	1	
SW6314		VSS0126	SWITCH	1	
SW6315		ESD100124	SWITCH	1	
SW6316		VSP0291	SWITCH	1	
	■	VEP06445A	CAMERA OPERATION C.B.A.		
			CAPACITORS		
C6801		ECEA0JKS101	E.CAPACITOR 6.3V 100U	1	
C6802		ECEA0JKS101	E.CAPACITOR 6.3V 100U	1	
			DIODES		
D6801		MA165	DIODE	1	
D6802		MA165	DIODE	1	
D6803		MA165	DIODE	1	
			CONNECTORS		
P6801		VJS2111	CONNECTOR	1	
P6802		VJP1612T	CONNECTOR (MALE)	1	
			RESISTORS		
R6801		ERDS2TJ562	C.RESISTOR 1/4W 5.6K	1	
R6802		ERDS2TJ102	C.RESISTOR 1/4W 1K	1	
R6803		ERDS2TJ563	C.RESISTOR 1/4W 56K	1	
R6804		ERDS2TJ563	C.RESISTOR 1/4W 56K	1	
SW6801		EVQQSU04W	SWITCH	1	
SW6802		EVQQSU04W	SWITCH	1	
SW6803		EVQQSU04W	SWITCH	1	
SW6804		EVQQSU04W	SWITCH	1	
SW6805		EVQQSU04W	SWITCH	1	
SW6806		EVQQSU04W	SWITCH	1	
SW6807		VSS0186	SWITCH	1	
SW6808		VSS0220	SWITCH	1	
	■	VEK3453	ZOOM SW C.B.A.		
	■	VEK3454	BACK UP C.B.A.		

Ref.No.		Part No.	Part Name & Description	Pcs	Remarks
	■	VEK3455	TAKE UP REEL SENSOR C.B.A.		
			MISCELLANEOUS		
		ON2170	PHTO INTERRUPTER		
	■	VXA3107	CASSETTE DOWN C.B.A.		
			MISCELLANEOUS		
		ON1382	PHTO COUPLER		
	■	VEK3345	STATOR C.B.A.		
			MISCILLANEOUS		
		VBK0050	MR HEAD		

3.VW-AMC1E/B/A/EA/EN/EM Mechanical Replacement Parts List

Note:1.* Be sure to make your orders of replacement parts according to this list.
2.IMPORTANT SAFETY NOTICE
Components identified with the mark <!> have the special characteristics for safety. When replacing any of these components,use only the same type.

Ref.No.		Part No.	Part Name & Description	Pcs	Remarks
2(1)		VKM1087	TOP PLATE	1	
3(1)		VJA0481	AC CORD	1	VW-AMC1E/EG/EP/EN <!>
3(1)		VJA0480	AC CORD	1	VW-AMC1B <!>
3(1)		VJA0448	AC CORD	1	VW-AMC1A/EA <!>
3(1)		VJA0460	AC CORD	1	VW-AMC1EM <!>
4(1)		VMZ1102	BARRIER	1	
5(1)		VKU0266	BOTTOM PLATE UNIT	1	
6(1)		VYP2060	FRONT PANEL	1	VW-AMC1E/EG/B/EP/A/EA
6(1)		VYP2061	FRONT PANEL	1	VW-AMC1EN/EM
7(1)		VYP2075	SIDE PANEL (R) UNIT	1	
8(1)		VYP2077	SIDE PANEL (L) UNIT	1	
9(2)		VGQ1346	SW HOLDER	1	
12(2)		VPN1990	CUSION	1	VW-AMC1A
13(2)		VPG3764	PACKING CASE	1	VW-AMC1A
14(2)		VQT2401	OPERATING INSTRUCTIONS	1	VW-AMC1A <!>
15(1)		VJF0107	JACK HOLDER	1	
16(1)		VKF0970	HEAT SINK	1	
17(1)		ELY07V552B	HEAT SINK	1	
18(2)		VJA0401	DC CABLE	1	<!>

4. Electrical Replacement Parts List

Note:1.* Be sure to make your orders of replacement parts according to this list.
2.IMPORTANT SAFETY NOTICE
Components identified with the mark <!> have the special characteristics for safety. When replacing any of these components,use only the same type.
3.Unless otherwise specified,
All resistors are in OHMS ,K=1,000 OHMS. All capacitors are in MICROFARADS(uf),P=uuF.
4.The P.C.Board units marked width'■'show below the main assembled parts.

Ref.No.		Part No.	Part Name & Description	Pcs	Remarks
		VEP61011A	MAIN C.B.A.	1	
		VEP60050A	PRIMARY COIL CONTROL C.B.A.	1	
		VEP60051A	CHARGE CONTROL C.B.A.	1	
		VEP60049A	LED C.B.A.	1	
	■	VEP61011A	MAIN C.B.A.		
			CAPACITORS		
C05		ECQU2A104MN	P.CAPACITOR 100V 0.1U	1	<!>
C06		VCK0046	C.CAPACITOR 1000P	1	<!>
C07		VCK0046	C.CAPACITOR 1000P	1	<!>
C08		VCK0046	C.CAPACITOR 1000P	1	<!>
C09		ECKD2H151KB	E.CAPACITOR 500V 150U	1	
C10		ECOS2GG470D	E.CAPACITOR 400V 47U	1	
C11		ECQE2104KF	P.CAPACITOR 0.1U	1	
C12		ECCD3A470KGE	C.CAPACITOR 1KV 47U	1	
C13		ECKD2H101KB	E.CAPACITOR 500V 100U	1	
C14		ECEA1VGE220	E.CAPACITOR 35V 22U	1	
C15		ECEA1VFE101	E.CAPACITOR 35V 100U	1	
C16		ECEA1EFE471	E.CAPACITOR 25V 470U	1	
C17		ECEA1EFE471	E.CAPACITOR 25V 470U	1	
C18		ECEA1CKS100	E.CAPACITOR 16V 10U	1	
C19		ECEA1CKS100	E.CAPACITOR 16V 10U	1	
C20		ECEA1EGE471	E.CAPACITOR 25V 470U	1	
C21		ECEA1VFE270	E.CAPACITOR 35V 27U	1	
C22		ECEA0JKS470	E.CAPACITOR 6.3V 47U	1	
C23		ECEA1CKS100	E.CAPACITOR 16V 10U	1	
C24		ECKF1H1032F	C.CAPACITOR 50V 0.01U	1	
C25		ECKF1H1032F	C.CAPACITOR 50V 0.01U	1	
C26		VCK0046	C.CAPACITOR 1000P	1	<!>
			DIODES		
D01		S1WBA60	DIODE	1	<!>
D02		APO1CV2	DIODE	1	
D03		ERA82-004	DIODE	1	
D04		MA4270LTA	DIODE	1	
D05		ERA22-04	DIODE	1	
D06		ERA22-04	DIODE	1	
D07		MA649	DIODE	1	
D08		MA4110M	DIODE	1	
D09		31DQ04FC5	DIODE	1	
D10		31DQ04FC5	DIODE	1	
D11		MA165	DIODE	1	
D12		MA165	DIODE	1	
D13		MA165	DIODE	1	
D14		MA165	DIODE	1	
D15		ERA22-04	DIODE	1	
D16		MA4062M	DIODE	1	
D17		MA4062M	DIODE	1	
D18		MA4062M	DIODE	1	
D19		ERA22-04	DIODE	1	
			FUSE		
F01		XBA2C10TBO	FUSE	1	<!>
			INTEGRATED CIRCUITS		
IC01		HA178L05	IC	1	
			CONNECTOR		
JK1		VJJ0174	CONNECTOR	1	
			COILS		
L02		ELF18D290A	COIL 29UH	1	<!>
L03		ELF18D290A	COIL 29UH	1	<!>
L04		VLQ0292	COIL	1	
L5		VLP0043	COIL	1	
L6		VLP0043	COIL	1	
L07		VLP0064	COIL	1	
L08		VLP0064	COIL	1	
			CONNECTORS		
P1		VJP1141	CONNECTOR (MALE)	1	
P2		VJP1141	CONNECTOR (MALE)	1	
			PHTO COUPLER		
PC01		PC111	PHTO COUPLER	1	<!>
			TRANSISTORS		
Q01		2SK808	TRANSISTOR	1	<!>
Q02		2SB952	TRANSISTOR	1	
Q03		2SB952	TRANSISTOR	1	
Q04		2SB952	TRANSISTOR	1	
Q05		2SD1458	TRANSISTOR	1	
Q06		2SD636	TRANSISTOR	1	(Q,R,S)
Q07		2SD636	TRANSISTOR	1	(Q,R,S)
			RESISTORS		
R01		ERC12GM334	S.RESISTOR 1/2W 330K	1	<!>
R02		ERDS2TJ114	C.RESISTOR 1/4W 110K	1	
R03		ERDS2TJ114	C.RESISTOR 1/4W 110K	1	
R04		ERDS2TJ114	C.RESISTOR 1/4W 110K	1	
R05		ERDS2TJ114	C.RESISTOR 1/4W 110K	1	
R06		ERG2SJ333	M.RESISTOR 2W 33K	1	
R07		ERG2SJ333	M.RESISTOR 2W 33K	1	
R08		ERX1SJR82P	M.RESISTOR 1W 0.82	1	
R09		ERDS2TJ221	C.RESISTOR 1/4W 220	1	
R10		ERDS2TJ470	C.RESISTOR 1/4W 47	1	
R11		ERDS2TJ223	C.RESISTOR 1/4W 22K	1	
R12		ERDS2TJ183	C.RESISTOR 1/4W 18K	1	
R13		ERDS2TJ331	C.RESISTOR 1/4W 330	1	
R14		EROS2CKG8201	M.RESISTOR 1/4W 8.2K	1	
R15		ERDS2TJ181	C.RESISTOR 1/4W 180	1	
R16		ERDS2TJ821	C.RESISTOR 1/4W 820	1	
R17		ERDS2TJ103	C.RESISTOR 1/4W 10K	1	
R18		ERDS2TJ103	C.RESISTOR 1/4W 10K	1	
R19		ERDS1TJ101	C.RESISTOR 1/2W 100	1	
R20		ERDS1TJ181	C.RESISTOR 1/2W 180	1	
R21		ERDS1TJ181	C.RESISTOR 1/2W 180	1	
R22		ERX1SJR33P	M.RESISTOR 1W 0.33	1	

Ref.No.		Part No.	Part Name & Description	Pcs	Remarks
R23		ERDS2TJ100	C.RESISTOR 1/4W 10	1	
R24		ERDS2TJ120	C.RESISTOR 1/4W 12	1	
R25		ERD2FCG470	C.RESISTOR 2W 47	1	
			TRANSFORMAR		
T01		VLT0525	TRANSFORMAR	1	<!>
			FUSE		
TF1		VSF0061	FUSE	1	
			THERMISTOR		
TH01		ERTD2ZHL332S	THERMISTOR 3.3K	1	
			CRYSTAL OSCILLATOR		
X01		VSX0094	CRYSTAL OSCILLATOR	1	
			SURGE ABSORBER		
ZNR01		ERZC07DK471U	SURGE ABSORBER 470V	1	
	■	VEP60050A	PRIMARY COIL CONTROL C.B.A.		
			CAPACITORS		
C101		ECUX1E104ZFM	CHIP 25V 0.1U	1	
C102		ECUX1H471KBN	CHIP 50V 470P	1	
C103		ECUX1H222KBN	CHIP 50V 2200P	1	
C104		ECSE1EY474Z	T.CAPACITOR 25V 0.47U	1	
C105		ECUM1H104KBM	CHIP 50V 0.1U	1	
			DIODES		
D101		MA151K	DIODE	1	
D102		MA3051	DIODE	1	
			INTEGRATED CIRCUITS		
IC101		M51976FP	IC	1	
			CONNECTORS		
P101		VJR0245	CONNECTOR	1	
P102		VJR0245	CONNECTOR	1	
P103		VJR0246	CONNECTOR	1	
			RESISTORS		
R101		ERJ6GMYJ823	CHIP 1/16W 82K	1	
R102		ERJ6GMYJ391	CHIP 1/16W 390	1	
R103		ERJ6GMYJ472	CHIP 1/16W 4.7K	1	

Ref.No.		Part No.	Part Name & Description	Pcs	Remarks
R104		ERJ6GMYJ223	CHIP 1/16W 22K	1	
R105		ERJ6GMYJ223	CHIP 1/16W 22K	1	
R106		ERJ6GMYJ153	CHIP 1/16W 15K	1	
R107		ERJ6GMYJ101	CHIP 1/16W 100	1	
R108		ERJ6GMYJ220	CHIP 1/20W 22K	1	
	■	VEP60051A	CHARGE CONTROL C.B.A.		
			CAPACITORS		
C201		ECUM1H104KBV	CHIP 50V 0.1U	1	
C202		ECUM1H104KBV	CHIP 50V 0.1U	1	
C203		ECUX1H102KBN	CHIP 50V 1000P	1	
C204		ECUM1E224ZFM	CHIP 25V 0.22U	1	
C205		ECUX1H102KBN	CHIP 50V 1000P	1	
C206		ECUX1H270JCN	CHIP 50V 27P	1	
C207		ECUX1H270JCN	CHIP 50V 27P	1	
C208		ECUX1E104ZFM	CHIP 25V 0.1U	1	
			DIODES		
D201		MA151WA	DIODE	1	
D202		MA3051	DIODE	1	
D203		MA151K	DIODE	1	
D204		MA151K	DIODE	1	
D205		MA3047	DIODE	1	
D206		MA3047	DIODE	1	
D207		MA3047	DIODE	1	
D208		MA3047	DIODE	1	
			INTEGRATED CIRCUITS		
IC201		UPC324G2	IC	1	
IC202		MN1551VBP	IC	1	
			CONNECTOR		
P201		VJR0391	CONNECTOR	1	
P202		VJR0391	CONNECTOR	1	
			TRANSISTOR		
Q201		2SD601	TRANSISTOR	1	(Q,R,S)
Q202		2SD601	TRANSISTOR	1	(Q,R,S)
Q203		2SD601	TRANSISTOR	1	(Q,R,S)
Q204		2SB709A	TRANSISTOR	1	
Q205		2SB709A	TRANSISTOR	1	
			COMBINATION CIRCUIT		
QR201		UN2214	TRANSISTOR-RESISTOR	1	
QR202		UN2122	TRANSISTOR-RESISTOR	1	
			RESISTORS		
R201		ERJ6GMY0R00	CHIP 1/16W 0	1	
R203		ERJ6GMYJ563	CHIP 1/16W 56K	1	
R204		ERJ6GMYJ102	CHIP 1/16W 1K	1	
R206		ERJ6GMY0R00	CHIP 1/16W 0	1	
R207		ERJ6GMYG822	CHIP 1/16W 8.2K	1	
R208		ERJ6GMYJ682	CHIP 1/16W 6.8K	1	
R209		ERJ6GMYJ223	CHIP 1/16W 22K	1	
R210		ERJ6GMYJ682	CHIP 1/16W 6.8K	1	

Ref.No.		Part No.	Part Name & Description	Pcs	Remarks
R211		ERJ6GMYJ562	CHIP 1/16W 5.6K	1	
R212		ERJ6GMYJ562	CHIP 1/16W 5.6K	1	
R213		ERJ6GMYJ562	CHIP 1/16W 5.6K	1	
R214		ERJ6GMYJ562	CHIP 1/16W 5.6K	1	
R215		ERJ6GMYJ332	CHIP 1/16W 3.3K	1	
R216		ERJ6GMYJ682	CHIP 1/16W 6.8K	1	
R217		EXBM16D8BLJ	RESISTOR-RESISTOR	1	
R218		ERJ6GMYJ102	CHIP 1/16W 1K	1	
R219		ERJ6GMYJ103	CHIP 1/16W 10K	1	
R220		ERJ6GMYJ102	CHIP 1/16W 1K	1	
R221		ERJ6GMYJ103	CHIP 1/16W 10K	1	
R222		ERJ6GMYJ823	CHIP 1/16W 82K	1	
R223		ERJ6GMYK106	CHIP 1/16W 10M	1	
R224		ERJ6GMYJ224	CHIP 1/16W 220K	1	
R225		ERJ6GMYJ473	CHIP 1/16W 47K	1	
R226		ERJ6GMYJ183	CHIP 1/16W 18K	1	
R227		ERJ6GMYJ102	CHIP 1/16W 1K	1	
R228		ERJ6GMYJ102	CHIP 1/16W 1K	1	
R229		ERJ6GMYJ103	CHIP 1/16W 10K	1	
R230		ERJ6GMYJ562	CHIP 1/16W 5.6K	1	
R231		ERJ6GMYJ103	CHIP 1/16W 10K	1	
R232		ERJ6GMYJ102	CHIP 1/16W 1K	1	
R233		ERJ6GMYJ103	CHIP 1/16W 10K	1	
R234		ERJ6GMYJ562	CHIP 1/16W 5.6K	1	
R235		ERJ6GMYJ103	CHIP 1/16W 10K	1	
R236		ERJ6GMYJ102	CHIP 1/16W 1K	1	
R237		ERJ6GMYJ102	CHIP 1/16W 1K	1	
R238		ERJ6GMYJ102	CHIP 1/16W 1K	1	
R239		ERJ6GMYJ102	CHIP 1/16W 1K	1	
R240		ERJ6GMYJ473	CHIP 1/16W 47K	1	
	■	VEP60049A	LED C.B.A.		
			DIODES		
D300		LN81RCPHL	LED	1	
D301		LN81RCPHL	LED	1	
D302		LN81RCPHL	LED	1	
			RESISTORS		
R300		ERDS2TJ471	C.RESISTOR 1/4W 470	1	
R301		ERDS2TJ102	C.RESISTOR 1/4W 1K	1	
R302		ERDS2TJ102	C.RESISTOR 1/4W 1K	1	
R303		ERDS2TJ471	C.RESISTOR 1/4W 470	1	

Ref.No.		Part No.	Part Name & Description	Pcs	Remarks

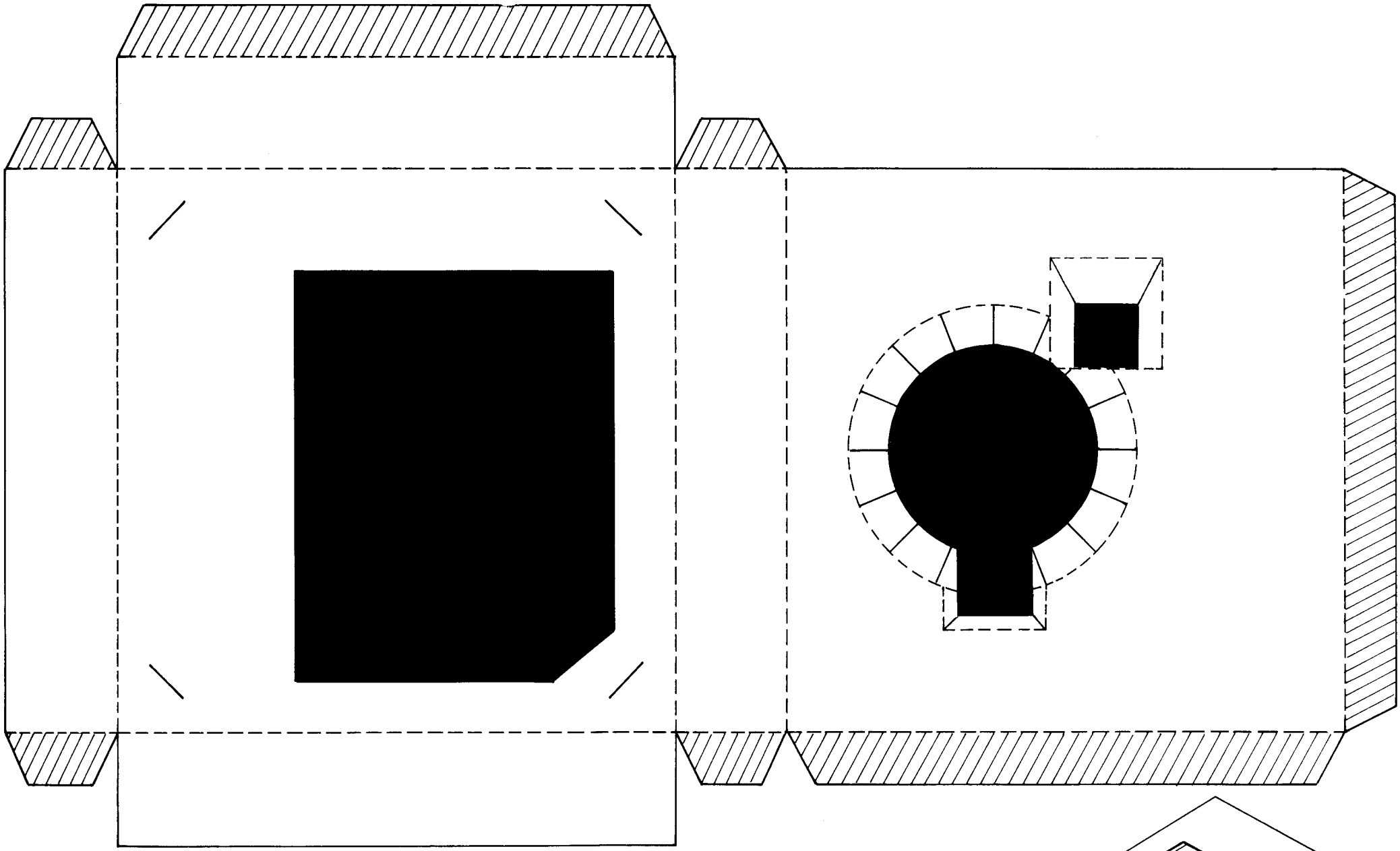

Assembling Procedure.

1) Cut the " ——— " line.
2) Fold the "– – – –" line and paste on the " ▨ " part, and assemble (make) the box as shown in right side.
3) Use the this box when you adjust the AWT white tracking.

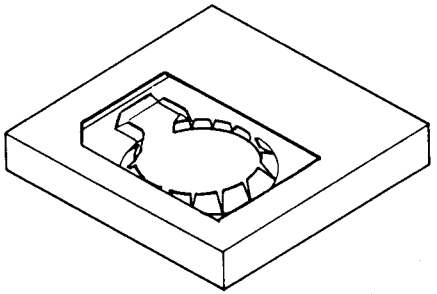

ORDER NO. VRD8712M16

Service Manual

General Description
Adjustment Procedures
Block/Schematic Diagrams
Exploded Views/Parts List

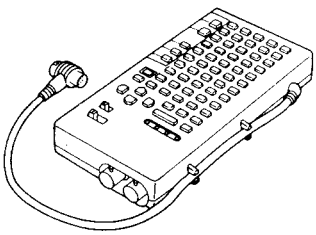

VW-RFC1

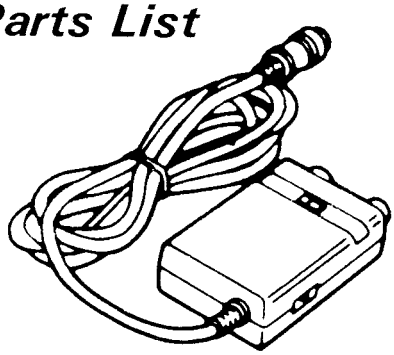

VW-CG1

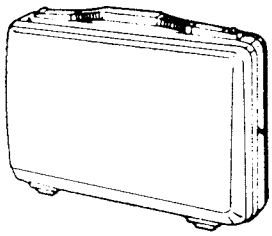

VW-SHMC1

VW-GPC1

VW-CG1 E/EN

ITEM	SPECIFICATIONS
POWER	DC 4.85V
VIDEO	INPUT: VIDEO IN CONNECTOR (VW-CG1E: BNC type) 1.0Vp-p 75Ω terminated (VW-CG1EN: PHONO type) OUTPUT: VIDEO OUT CONNECTOR (VW-CG1E: BNC type) 1.0Vp-p 75Ω terminated (VW-CG1EN: PHONO type)
WEIGHT	155 g (without Batteries)
DIMENSIONS	71 (W) × 142 (H) × 26 (D) mm
ACCESSORIES	3pcs. Button-type Alkaline Batteries (LR44H) 1pc. Shoe Adaptor

VW-RFC1 E/B/A/EN

ITEM	SPECIFICATIONS
RF OUT SYSTEM	UHF: 36 ± 4 CH (VW-RFC1 E/B/EN) (PAL G/I) VHF: 0/1 CH (VW-RFC1A) (PAL G)
DIMENSIONS	52 (W) × 24 (H) × 93 (D)

Weight and dimensions shown are approximate.
Specifications are subject to change without notice.

National

Matsushita Electric Trading Co., Ltd
P.O. Box 288, Central Osaka Japan

INTRODUCTION

This servicemanual contains technical information which will allow service technicians to understand and service these models. VW-CG1, VW-RFC1, VW-SHMC1, VW-GP1 are accessories for NV-MC10. VW-CG1 can be used to NV-M7.
Please place orders using the parts list and not the drawing reference numbers.
If the circuit is changed or modified, this information will be followed by supplementary service manual to be filed with original service manual.

CONTENTS

1.VW-CG1E, EN

SECTION 1: GENERAL DESCRIPTIONS

1–1–1. Features ····· 1
1–1–2. How to Attach The Character Generator ····· 1
1–1–3. Controls, Components and Functions ····· 2
1–1–4. Installing The Batteries ····· 3
1–1–5. Setting The Clock ····· 4
1–1–6. Composing and Editing The Titles ····· 5
1–1–7. Title Recording ····· 8
1–1–8. Scroll Recording ····· 8
1–1–9. How to Use The Stopwatch ····· 10
1–1–10. Superimpose Title Recording During Dubbing ····· 11

SECTION 2: ADJUSTMENT PRODURES

1–2–1. Test Equipments ····· 12
1–2–2. How to Read The Adjustment Procedures ····· 12
1–2–3. Character Position Adjustment ····· 12
1–2–4. Character Sphere Adjustment ····· 12
1–2–5. Clock Frequency Adjustment ····· 12

SECTION 3: BLOCK DIAGRAM & SCHEMATIC DIAGRAM

1–3–1. Block Diagram ····· 13
1–3–2. Main C.B.A. (VEP66051D,E) ····· 14
1–3–3. Switch C.B. ····· 15
1–3–4. Schematic Diagram ····· 16

SECTION 4: EXPLODED VIEWS

1–4–1. Character Generator Section ····· 18
1–4–2. Packing Section ····· 19

2.VW-RFC1E, B, A, EN

2–1. How to Adjust The RF Converter Frequency ····· 20
2–2. Schematic Diagram ····· 21
2–3. Exploded View ····· 22

3.VW-SHMC1E, EN

3–1. Exploded View ····· 23

4.VW-GPC1E

4–1. How to Use The Handgrip ····· 24
4–2. Exploded View ····· 24

PARTS LIST ····· 25

1. VW-CG1E, EN

SECTION 1: General Descriptions

1-1-1 FEATURES

- **Title Recording**
- **Time/Date Recording**
- **Stopwatch Recording**
- **Superimpose Title Recording During Dubbing**
- **Multi-Language Capability**

1-1-2 HOW TO ATTACH THE VW-CG1

Use the Shoe Adaptor that is supplied with the Character Generator.

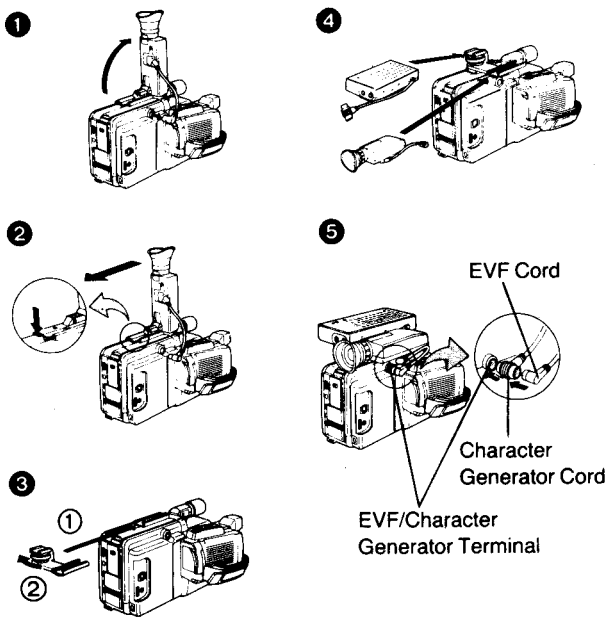

❶ Disconnect the EVF Cord and turn the EVF upward.

❷ Keep pressing the part indicated by the arrow and remove the EVF by sliding it toward the rear.

❸ Attach the Shoe Adaptor and tighten the screw.

❹ Attach the EVF and the Character Generator to the Shoe Adaptor.

❺ Insert the plug of the EVF Cord into the back of the plug of the Character Generator Cord and insert them together into the EVF/Character Generator Terminal.

The use of the Character Generator makes it possible to record titles, time, date and stopwatch while shooting some scene.

How to Attach the Character Generator

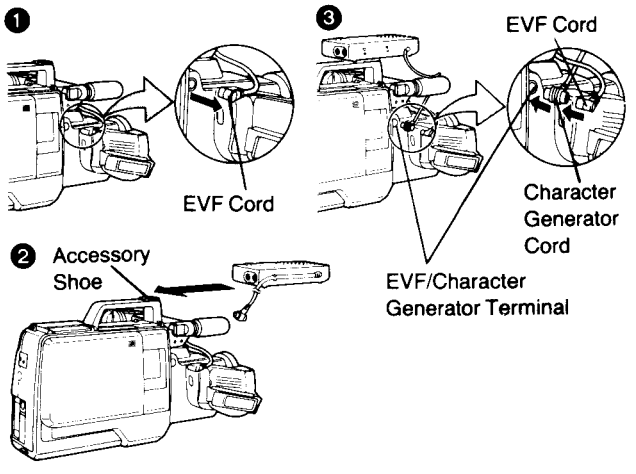

❶ Disconnect the EVF Cord.
❷ Attach the Character Generator to the Accessory Shoe.
❸ Insert the plug of the EVF Cord into the back of the plug of the Character Generator Cord and insert them together into the EVF/Character Generator Terminal.

1-1-3 CONTROLS COMPONENTS AND FUNCTIONS

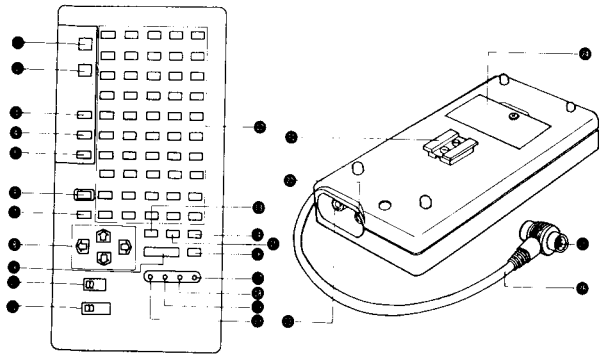

❶ **DISPLAY Button**
For displaying or deleting titles on the screen.

❷ **PAGE Button**
For changing pages.

❸ **START/STOP Button**
For starting/stopping the stopwatch, and starting/stopping the scrolling during recording.

❹ **LAP/RESET Button**
For indicating the lap time, resetting the stopwatch and resetting scrolling to the beginning during preview.

❺ **SCROLL Button**
This button is used for different functions in the title scroll mode.

❻ **CLEAR Button**
For returning the cursor to the beginning of the first line. When used with the SHIFT Button, it deletes all titles on the page.

❼ **SPACE Button**
For leaving a blank space the size of one character.

❽ **Cursor Buttons**
For moving the cursor or (when used with the SHIFT Button) moving the titles, or changing the scrolling speed.

❾ **SHIFT Button**
This button must be pressed together with another button.

	Functions
SIZE Button	To change the size of the characters of the line on which the cursor is placed.
Letter/ Number/ Symbol Buttons	To input small letters while in the capital letter mode, or for inputting capital letters while in the small letter mode. In the symbol mode, this button has no effect.
Cursor Buttons	To move the titles.
PAGE Button	To change to the previous page.
CLEAR Button	To delete all titles on the page being displayed. (The page is also erased in the memory.)

❿ **Date Selector (DATE·DATE/CLOCK)**
For selecting the Date Indication or the Date/Clock Indication.

⓫ **Mode Selector**
For selecting the mode (title editing, title recording, stopwatch, auto date).

⓬ **Letter/Number/Symbol Buttons**
For inputting letters, numbers and symbols.

⓭ **SIZE Button**
For selecting the size of the characters for the titles.

⓮ **SYMBOL Button**
For inputting symbols.

⓯ **SMALL LETTER Button**
For selecting capital letters (upper case) or small letters (lower case).

⓰ **DELETE Button**
For deleting one character to the left of the cursor.

㉑ **Mounting Adaptor Foot**
Attach the supplied Shoe Adaptor and mount the Character Generator on the VHS/VHS-C Movie.

㉒ **Video Input Jack (VIDEO IN)**
For superimposing titles while dubbing from the VHS/VHS-C Movie onto another VTR.

㉓ **Video Output Jack (VIDEO OUT)**
For superimposing titles while dubbing from the VHS/VHS-C Movie onto another VTR.

㉔ **Battery Compartment**
Install the button-type batteries for memory back-up.

㉕ **EVF Terminal**
Connect the Electronic Viewfinder of the VHS/VHS-C Movie to this terminal.

㉖ **Connection Cable**
Connect this cable to the EVF Terminal of the VHS/VHS-C Movie.

Buttons used for setting the date and the time (⓱ ~ ⓳)

⓱ **SET Button**

⓲ **SHIFT Button**

⓳ **ADJ Button**

⓴ **ALL RESET Button**
Pressing this button deletes all memorized titles.

1-1-4 INSTALLING THE BATTERIES

1. Remove the screw of the battery compartment cover with a screwdriver.

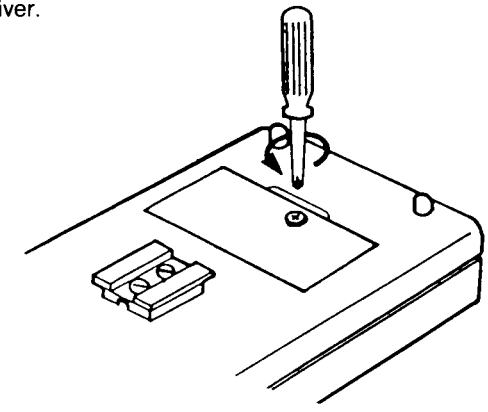

2. Remove the cover.

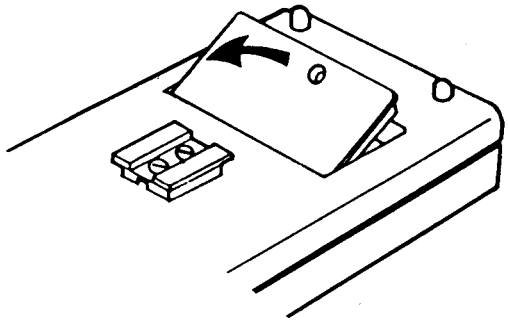

3. Insert three button-type alkaline batteries (LR44H) with their plus (+) side facing up.

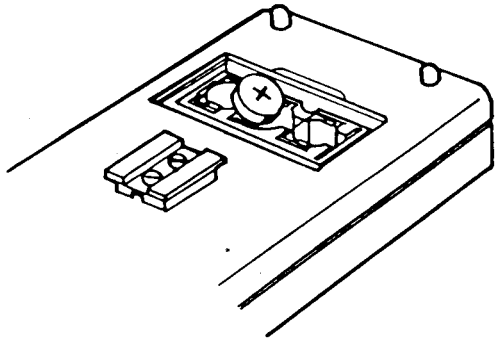

4. Replace the cover.
5. Tighten the screw with the screwdriver.

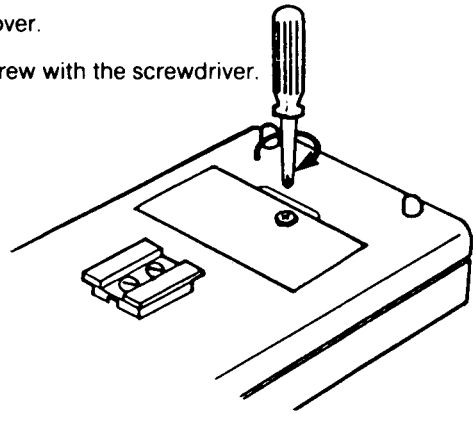

In this Character Generator, three button-type alkaline batteries (LR44H) are used for memory back-up.
Even when the VHS/VHS-C Movie is turned off, the composed titles are still memorized as long as the batteries are not exhausted. The battery life is approximately 3~4 months.

• Replacing the Batteries

If the batteries are replaced with the Character Generator or the VHS/VHS-C Movie turned off, the memory will be erased.

When replacing the batteries, follow the instructions below.

1. Connect the Character Generator to the VHS/VHS-C Movie, and turn the camera on.

2. Install three new batteries.

   Besides the LR44H type batteries, MR44, NR44 and LR44 type batteries can also be used.

Button-type Alkaline Batteries

Keep the button-type alkaline batteries out of the reach of children. If a battery is swallowed, consult a doctor immediately.

- If battery leakage has occurred, wipe off the liquid completely and then install new batteries.

To prevent bursting or leaking of the batteries:
- Be sure to replace all three batteries with new ones at the same time.
- Install the batteries with their polarities (+) and (−) correctly aligned.
- Do not short-circuit, charge, disassemble or overheat the batteries, nor throw them into a fire.

1-1-5 SETTING THE CLOCK

Turn on the VHS/VHS-C Movie to which the Character Generator is connected, and set the clock while watching the Electronic Viewfinder (or the TV screen when the camera is connected to the TV set).

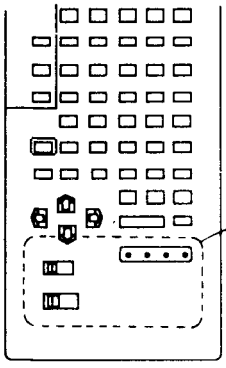

The clock can only be set with the buttons and switches of this section.

Automatic clock indication is possible till December 31, 2010, 23:59, as long as the batteries are not exhausted. When the clock is reset, it will start from January 1, 1987, 0:00.

- When the batteries become weak, a wrong date and time will be displayed (for example, 15:70). In this case, immediately replace the batteries with new ones. After the replacement, set the date and time again.

1. Set the Mode Selector to "AUTO DATE" and the Date Selector to "DATE/CLOCK".
   - The date and time will be displayed in the lower left corner of the screen.
   - When the Date Selector is set to "DATE", only the date will be displayed.

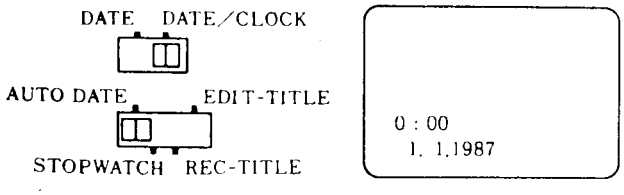

2. Press the ADJ Button.
   - The first part of the indication will flash.
   - Press the ADJ, SHIFT and SET Buttons with the tip of a ball-point pen, etc.

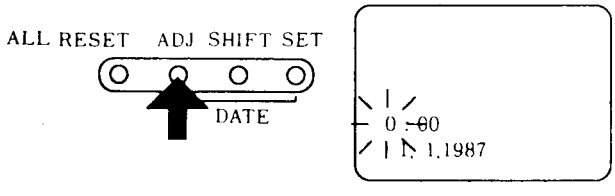

3. Set the flashing part of the indication by pressing the SET Button.
   - Keeping the SET Button pressed will change the indication continuously.

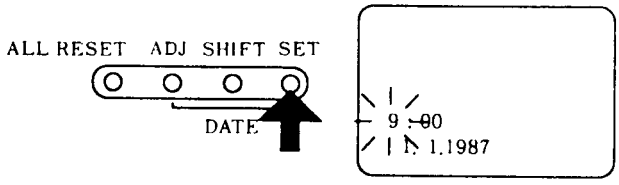

4. Press the SHIFT Button.
   - The next part of the indication will flash.

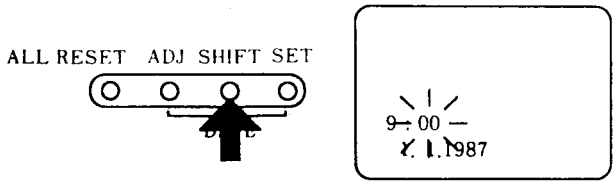

- Repeat steps 3 and 4 to set the hour, minute, day, month and year.

5. When the setting of the clock is completed, press the ADJ Button again.
   - The operation of the clock will now start.

• How the Indications Change

Hour → 0 → 1 → 2 → 3 → 4 → . . . → 22 → 23 →

Minute → 00 → 01 → 02 → 03 → . . . → 57 → 58 → 59 →

Day → 1 → 2 → 3 → 4 → . . . → 28 → (29) → (30) → (31) →

Month → 1 → 2 → 3 → 4 → 5 → . . . → 10 → 11 → 12 →

Year → 1987 → 1988 → 1989 → . . . → 2009 → 2010 →

• How the Flashing Part of the Indication Changes

→ Hour → Minute → Day → Month → Year →

• Moving the Display Position

Press the appropriate Cursor Button while pressing the SHIFT Button. Just like your own titles, the date and time indication can also be moved up and down, right and left.

- The new position of the date and time indication will be memorized.

• Recording the Date and/or the Time

Set the Mode Selector to "AUTO DATE".

- The date and/or the time can be recorded in the same way as the titles. (See page 18.)
- It is possible to display or delete the indication by pressing the DISPLAY Button.

1-1-6 COMPOSING AND EDITING THE TITLES

Before shooting, compose and edit titles that you may later want to use during recording.
As the composed titles are memorized, it is possible to revise them later and to insert them at desired positions during recording.
Compose and edit the titles while watching the Electronic Viewfinder of the VHS/VHS-C Movie, or the TV screen. Connect the VHS/VHS-C Movie to the TV set in the same way as when the Character Generator is not mounted. (See the operating instructions of the VHS/VHS-C Movie.)

• Title Pages

Title pages 1 to 9 can be used for titles only and on PAGE A, both titles and auto date indication can be displayed at the same time. (See the table below.)

Display Contents and Functions	PAGE 1 ~ PAGE 9	PAGE A
Character Size	S, M, L, LL	M
Maximum Number of Characters (1 page)	20 characters × 9 lines = 180 characters	12 characters × 4 lines = 48 characters
Title Movement. Scroll Function	Yes	No
Auto Date Indication	No	Yes

1. Set the Mode Selector to "EDIT-TITLE".
   - The indication "PAGE 1" will be displayed in the upper left corner of the screen for about 1 second and then the "■" marks indicating the character size will appear for 12 characters × 6 lines. (The 6th line will not be displayed completely.)
     The flashing "■" mark indicates the position of the cursor.
   - If the Lens Cap is put on the VHS/VHS-C Movie, the indications become easier to see.

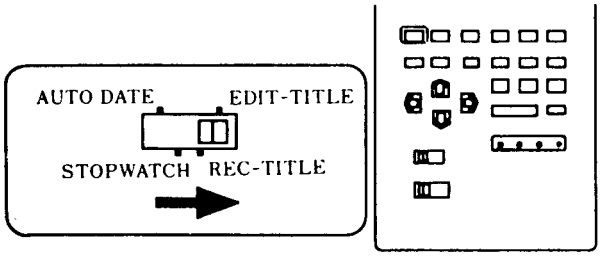

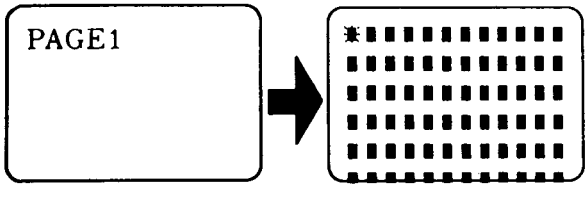

2. Select the desired character size by pressing the SIZE Button.
   There are four different character sizes to choose from.

Changing the Size of All Characters on the Screen

The "M" character size is automatically selected by default. By pressing the SIZE Button, the character size changes as shown below.
- When a character size other than "S" is selected, the last displayed line is not displayed completely.

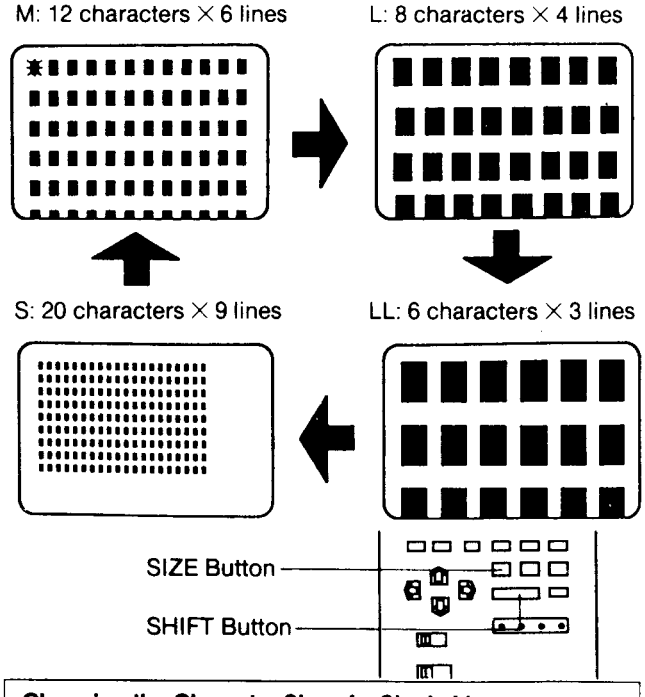

Changing the Character Size of a Single Line

Move the cursor to the line where you want to change the character size, and then press the SIZE Button while pressing the SHIFT Button.
After the size is changed, the cursor will move to the beginning of the line.
- When an already composed title is changed to a larger size, the end of the title may be cut off on the screen because it is too long.

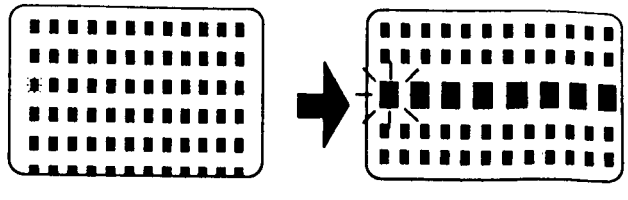

- If the SIZE Button is pressed after changing the character size of individual lines on a page, all lines will be changed to the next larger size, as illustrated on the left.
- It is possible to change the character size after inputting characters.

3. To move the cursor to the position where you want to input characters, press the Cursor Button for the desired direction.
   - Keeping the Cursor Button pressed moves the cursor continuously.

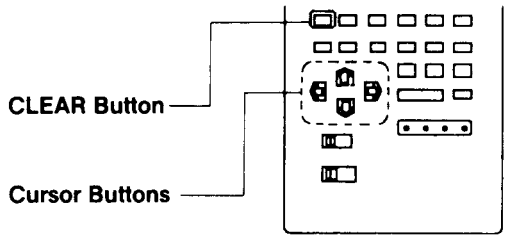

Button: The cursor moves to the right.
After reaching the end of a line, it moves to the beginning of the next lower line.

Button: The cursor moves to the left.
After reaching the beginning of a line, it moves to the end of the next higher line.

Button: The cursor moves to the beginning of the next lower line.
After reaching the bottom line, it returns to the beginning of the top line.

Button: The cursor moves to the beginning of the next higher line.
After reaching the top line, it returns to the beginning of the bottom line.

- The capacity of a title page is 9 lines irrespective of the character size.
  When a character size other than "S" is selected, the cursor may leave the screen at the right or at the bottom.
- When the CLEAR Button is pressed, the cursor will return to the beginning of the top line.

4. Input characters.
   - Use the buttons shown in the illustration below.

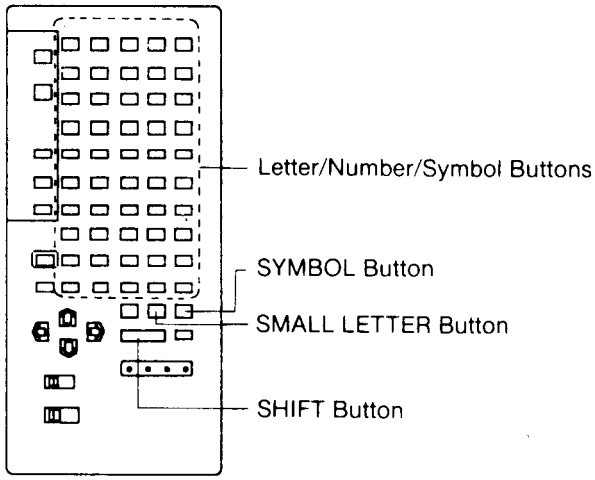

• Inputting Letters, Numbers and Symbols

By pressing the Letter/Number/Symbol Buttons, the characters which are indicated on the buttons (capital letters) can be input. To input small letters, press the buttons while keeping the SHIFT Button pressed.

- Pressing the SMALL LETTER Button puts the unit in the small letter mode and small letters can be input. To input capital letters while in this mode, input them while pressing the SHIFT Button. To return the unit to the capital letter mode, press the SMALL LETTER Button again.

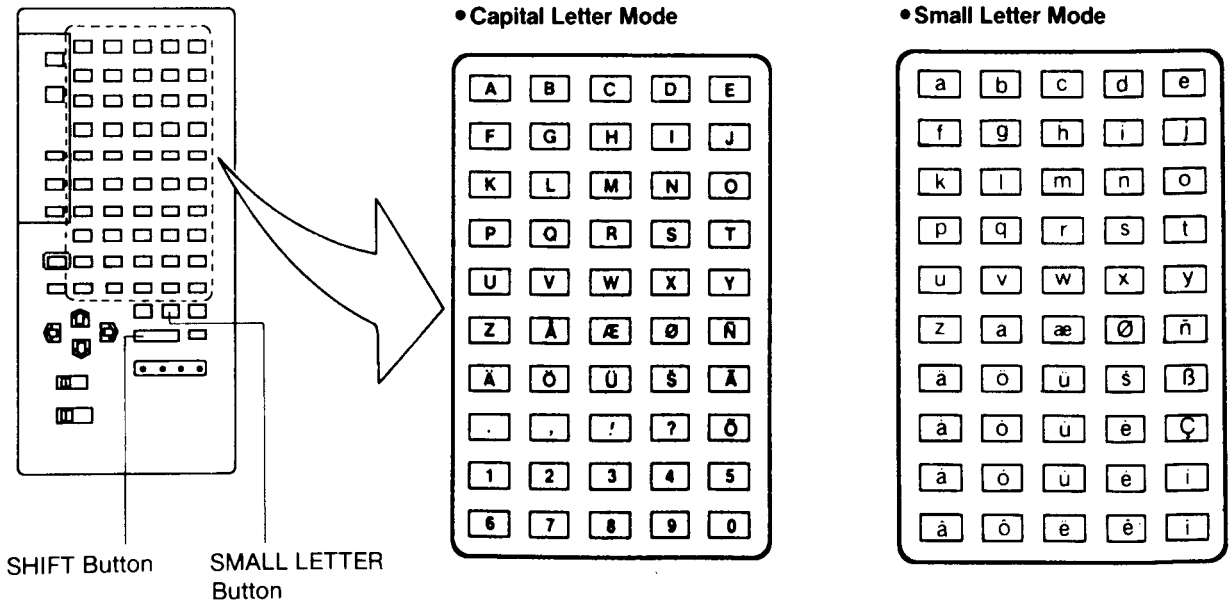

• Pressing the SYMBOL Button puts the unit in the symbol mode and symbols can be input. In this mode, the SHIFT Button does not function.

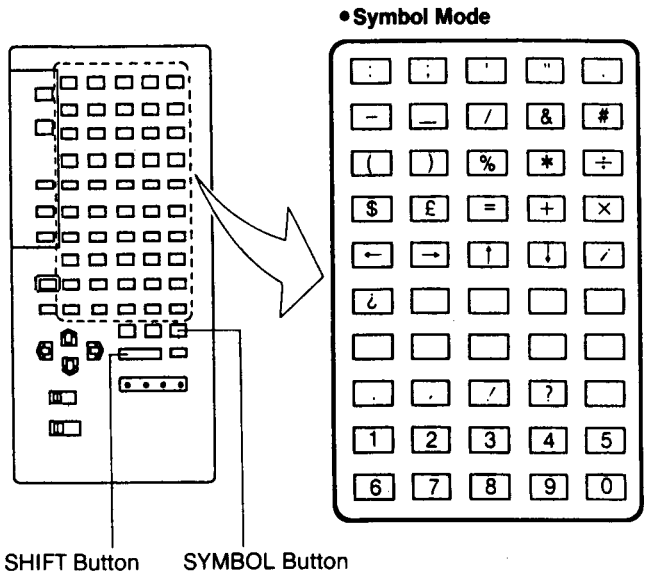

• **Inputting Spaces**

To leave a space between words, press the SPACE Button. You can also create blank space by moving the cursor.

• **Confirmation of the Selected Input Mode**

If the DELETE Button is pressed together with the SHIFT Button, the input mode will be displayed on the screen for confirmation.

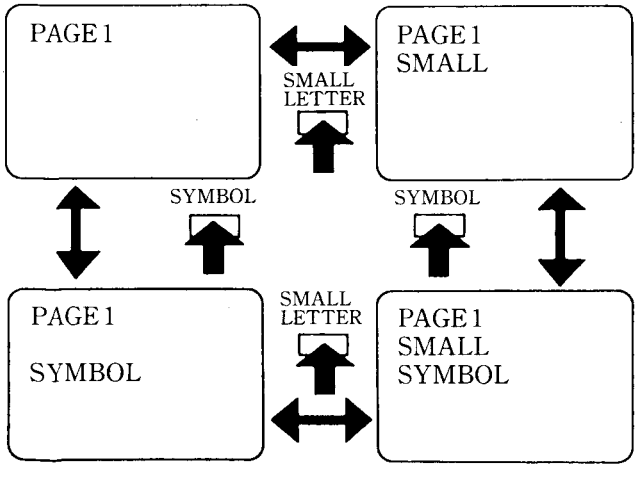

• After a character has been input, the cursor will move to the right to the position for the next character.

• **Deleting Characters**

Move the cursor to the right of the character to be deleted and press the DELETE Button. The character to the left of the cursor will be deleted and the cursor will move to the position of the deleted character.

- Keeping the DELETE Button pressed will delete the characters to the left of the cursor continuously.
- If the DELETE Button is pressed when the cursor is at the beginning of the first (top) line, the last character at the end of the last (bottom) line will be deleted.

• **Deleting All Characters on a Page**

To delete all characters on a page, press the CLEAR Button together with the SHIFT Button. The cursor will return to the beginning of the first (top) line and the "■" marks will appear for 12 characters × 6 lines on the screen.

• **Moving Titles**

By pressing the appropriate Cursor Button together with the SHIFT Button, the whole title on the screen can be moved up and down, right and left.
Keeping one of the Cursor Buttons pressed will move the whole title continuously.

Button: The whole title moves to the right.

Button: The whole title moves to the left.

Button: The whole title moves down.

Button: The whole title moves up.

• When moving titles, move them so that they do not leave the screen. The characters which are not on the screen will not be recorded in the normal title recording mode.

• **Changing Pages**

To advance to the next page after composing a title on PAGE 1, press the PAGE Button.

- After the indication "PAGE 2" is displayed in the upper left corner of the screen for about 1 second, the "■" marks will appear for 12 characters × 6 lines.
- Pressing the PAGE Button changes the pages as shown below.

→ PAGE 1 → PAGE 2 → . . . → PAGE 9 → PAGE A

• Pressing the PAGE Button together with the SHIFT Button changes the pages backward.

• **PAGE A**

When PAGE A is reached while changing the pages, the "■" marks for 12 characters × 4 lines and the date and time are displayed.

- It is not possible to move the title or to change the character size on PAGE A.

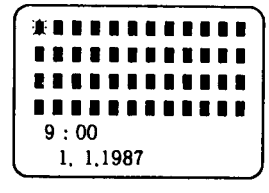

If the Date Selector is set to "DATE/CLOCK", the date and time will be displayed; if it is set to "DATE", only the date will be displayed under the title.

1-1-7 TITLE RECORDING

Recording composed titles during shooting.

1. Insert a tape into the VHS/VHS-C Movie and put the camcorder into the recording pause mode. (For details about the operation, read the Operating Instructions of the VHS/VHS-C Movie.)

2. Set the Mode Selector to "REC-TITLE".
   - When this switch is changed from "EDIT-TITLE" to "REC-TITLE", the page number followed by the title of that page (which was displayed in the "EDIT-TITLE" mode) appear on the screen. In this case, the "■" marks which appeared in the "EDIT-TITLE" mode will not appear on the screen.

3. Select the title page that you want to record.
   The pages can be changed in the same way as in the "EDIT-TITLE" mode. It is also possible to select the desired page directly, as described below on the right.
   - When changing the pages in the "REC-TITLE" mode, the page number indication does not appear.

4. Press the DISPLAY Button to remove the title from the screen.

5. Start shooting by pressing the Start/Stop Button on the VHS/VHS-C Movie. At the point where you want to superimpose the title, press the DISPLAY Button. To end the superimpose recording of the title (while letting the shooting continue), press the DISPLAY Button again.

• Changing the Character Size

Pressing the SIZE Button changes the size of all characters on the screen. The character size will be changed in the same order as in the "EDIT-TITLE" mode. It is not possible to change the character size line by line.
- Any change made in the character size in the "REC-TITLE" mode has no influence on the character size of the title memorized in the "EDIT-TITLE" mode.

• Moving Titles

To move the title, press the appropriate Cursor Button together with the SHIFT Button in the same way as in the "EDIT-TITLE" mode.
- Moving the titles in the "REC-TITLE" mode has no influence on the title positions memorized in the "EDIT-TITLE" mode.

• How to Select the Desired Page Directly

Select the desired title page directly by pressing the corresponding Number Button (1 ~ 9) or the Letter Button "A".
- If the page or the mode is changed when the title is not displayed, the title will appear automatically.

1-1-8 SCROLL RECORDING

The Scroll Recording Function makes it possible to record the composed titles while scrolling them from the bottom to the top of the screen. The scrolling will be performed continuously from the selected page through PAGE 9.

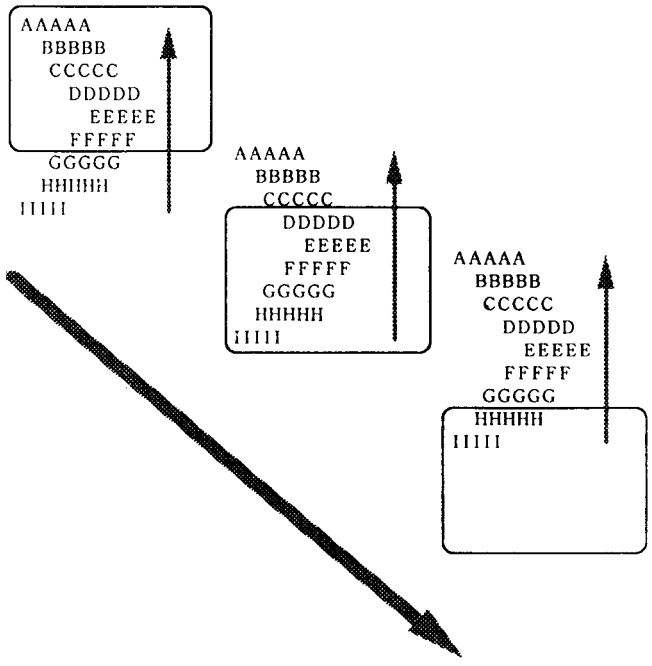

• Checking the Pages to Be Used for Scrolling

Be sure to check the scroll screen in the "EDIT-TITLE" mode before performing the scroll recording. (See the next page.)

Perform the check page by page.

The capacity of the scroll screen is limited to 9 lines per page.

If the titles that were composed in the "EDIT-TITLE" mode use characters of a larger size than "M" or a combination of different character sizes, be careful because the characters which are not displayed on the screen will also be scrolled.

When preparing titles for scrolling, compose them with the character size "S" for 9 lines and then change them to the desired size, starting from the last line. In this way, the titles can be composed while also confirming the characters that will not be displayed on the screen.

Even if you move the title position when composing the titles, all titles will automatically start at the beginning (left side) of each line when they are scrolled. Therefore, compose the titles so that they start at the original position.

For the scroll recording, the buttons and the selector shown in the illustration below are used.

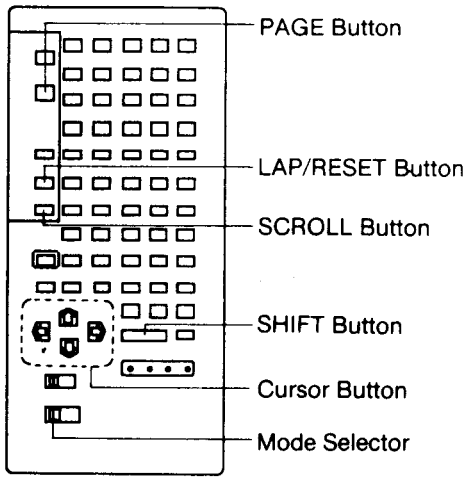

• Scrolling Preview

1. Set the Mode Selector to "EDIT-TITLE".

2. Press the SCROLL Button.

3. Scrolling preview will start and the lines 1 to 9 will appear at the bottom of the screen and scroll to the top until the last line has left the screen.

4. The screen will revert to the condition before scrolling.

5. Change to the next page and check it.
   - If the SCROLL Button is pressed in the middle of scrolling, the scrolling will stop and the character in the upper left corner of the screen will flash.
   - In this condition, you can correct the letters and change the character size.
   - To continue scrolling, press the SCROLL Button again.
   - To stop the scrolling preview and return to the beginning of the scrolled title, press the LAP/RESET Button.
     - The screen will return to the former condition and stop.
     - To start scrolling again, press the SCROLL Button.

• Recording Procedure

1. Set the Mode Selector to "REC-TITLE".
   - When this switch is changed from "EDIT-TITLE" to "REC-TITLE", the title page which was displayed in the "EDIT-TITLE" mode will appear.

2. Call up the title page from which you want to start scrolling by pressing the PAGE Button repeatedly.
   - You can also select the desired page directly (see page 18).

3. Press the SCROLL Button.
   - The title on the screen will disappear and the unit will be in the scroll standby mode. In this mode, it is not possible to change the page or to select the page directly.

4. Press the START/STOP Button of the Character Generator.
   The scrolling will start.
   - PAGE A cannot be scrolled.
     Even if PAGE A is selected, the scrolling will start from PAGE 1.
   - To interrupt the scrolling at any desired point, press the START/STOP Button.
     To continue the scrolling, press the START/STOP Button again.

   - When the last line of PAGE 9 has left the top of the screen, the scrolling will finish automatically. At this time, no title will be displayed on the screen.
   - If the LAP/RESET Button is pressed during scrolling, the scrolling will be reset and the start page will be displayed.

• Changing the Scrolling Speed

The scrolling speed can be changed in 6 steps in both the "EDIT-TITLE" mode and the "REC-TITLE" mode by pressing the SCROLL Button and then the appropriate Cursor Button.
- The changed scrolling speed will be memorized.

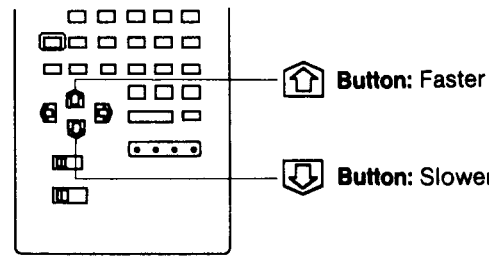

1-1-9 HOW TO USE THE STOP WATCH

This Character Generator also features a stopwatch function that counts and displays the elapsed time in 1/10-second increments.
For the stopwatch operation, the buttons and the selector shown in the illustration below are used.

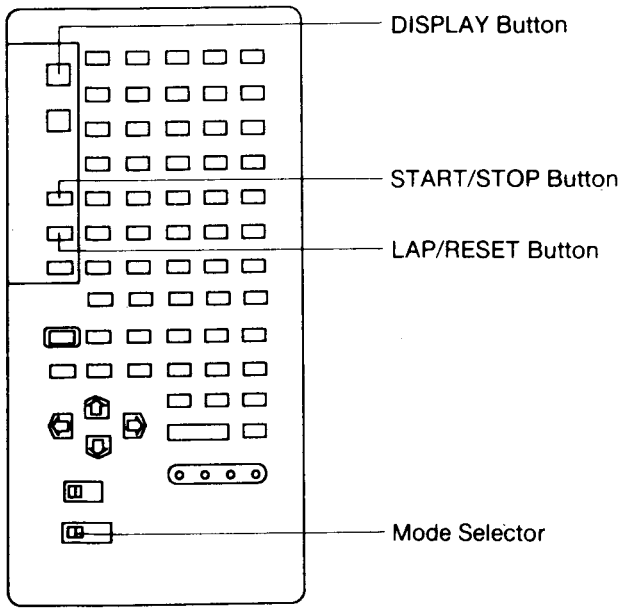

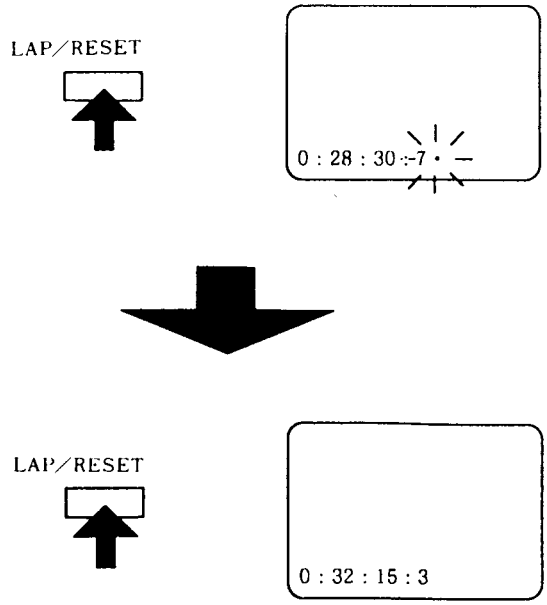

1. Set the Mode Selector to "STOPWATCH".
   - The stopwatch time will be displayed in the lower left corner of the screen.

2. Press the START/STOP Button.
   - The stopwatch will start working.
   - It can count and display the time up to 9:59'59"9.

3. To stop the stopwatch, press the START/STOP Button again.
   - The stopped time will be displayed on the screen.

4. To continue the counting from that position, press the START/STOP Button again.

5. To reset the stopwatch to zero, press the START/STOP Button to stop the counting and then press the LAP/RESET Button.

- By pressing the DISPLAY Button, the stopwatch indication can be deleted from the screen and be displayed again.
  - The stopwatch is working even if it is not displayed.

• Lap Time Indication

If the LAP/RESET Button is pressed while the stopwatch is working, the counter will stop and a blinking dot will appear on the right of the counter indication. Pressing the LAP/RESET Button again will display the actual ongoing count again. The stopwatch continues working while the lap time is displayed. If you press the START/STOP Button in this condition, the dot indicator on the right of the counter indication will stop blinking and be lit and the time counter will stop.

• Moving the Display Position

The stopwatch indication can also be moved up and down, right and left, just like the titles. Press the appropriate Cursor Button while pressing the SHIFT Button. The changed display position will be memorized even if the mode is changed.

1-1-10 SUPERIMPOSE TITLE RECORDING DURING DUBING

It is possible to add titles to already recorded scenes by superimposing them during dubbing from the VHS/VHS-C Movie.

Connections

- Carefully read the operating instructions of all units to be used.

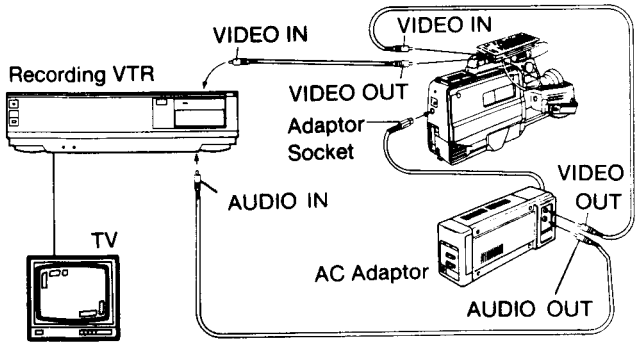

Connections

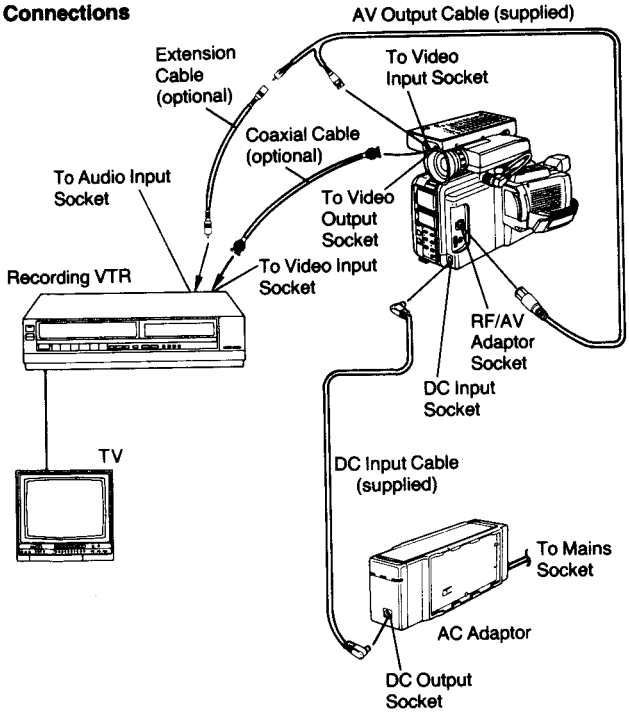

Operation

1. Turn on all connected units.

2. Insert a recorded tape into the VHS/VHS-C Movie and locate the scene onto which you want to superimpose a title, and put the camcorder in the playback pause mode just slightly before that scene.

3. Put the recording VTR in the recording pause mode.

4. Set the Mode Selector on the Character Generator to "REC-TITLE".
   - To superimpose the stopwatch or the date, set the Mode Selector to "STOPWATCH" or "AUTO DATE".

5. Select the title page or the mode to be used for the superimpose recording. Confirm that the title and/or the auto date indication or the stopwatch is displayed on the TV screen.

6. Put the recording VTR in the recording mode and the VHS/VHS-C Movie in the playback mode.
   - The superimpose recording will start.
   - To finish the dubbing, press the Stop Button on both the VHS/VHS-C Movie and the recording VTR.

- To delete the title while letting the dubbing continue, press the DISPLAY Button. When you want to perform scrolling, refer to the procedure for scroll recording (p. 21).

SECTION 2 : Adjustment Produres

1-2-1 TEST EQUEPMENTS

The following equipments are required for the adjustments.

(1) Oscilloscope
Dual Trace,30 MHz,2mV/Div
10:1 or 1:1 Prove

(2) Frequency Counter

(3) Monitor TV

1-2-2 HOW TO READ THE ADJUSTMENT PROCEDURES

TP ---- Connecting point of Mesuring Equipment.
ADJ. ---- Component being adjusted.
M.EQ. ---- Mesuring Equipment.
SPEC. ---- Specifications for adjustment or Method of adjustment.

1-2-3 CHARACTER POSITION ADJUSTMENT

TP	ADJ.	M.EQ.
VIDEO OUT	VR 1	MONITOR
SPEC		
CHARACTER IS CENTER		

(1) Connect the VW-CG1 to VHS/VHS-C Movie then set the Mode Selector to REC-TITLE Mode and turn on the VHS/VHS-C Movie.
(2) Press the ALL RESET Key and adjust VR1 so that character portion is center.

1-2-4 CHARACTER SPHERE ADJUSTMENT

TP	ADJ.	M.EQ.
VIDEO OUT TP 2	VR 2	OSCILLOSCOPE
SPEC		
T=1.6 ± 0.5μsec		

(1) Connect the VW-CG1 to VHS/VHS-C Movie then set the Mode Selector to REC-TITLE and turn on the VHS/VHS-C Movie.
(2) Adjust VR2 so that the period "T" becomes 1.6+-0.5usec.

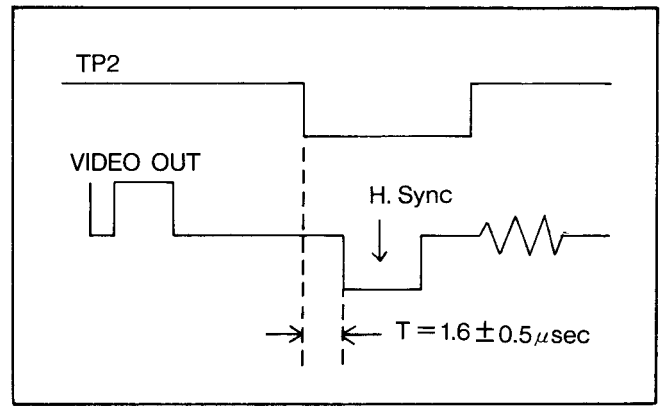

Fig. E1

1-2-5 CLOCK FREQUENCY ADJUSTMENT

TP	ADJ.	M.EQ.
TP 1	VC 1	FREQUENCY COUNTER
SPEC		
40960000 ± 1Hz		

(1) Connect the VW-CG1 to VHS/VHS-C Movie then turn on the VHS/VHS-C Movie.
(2) Adjust VC1 so that frequency becomes 40960000+-1Hz.

SECTION 3 : Block Diagram & Schematic Diagram

1-3-1 BLOCK DIAGRAM

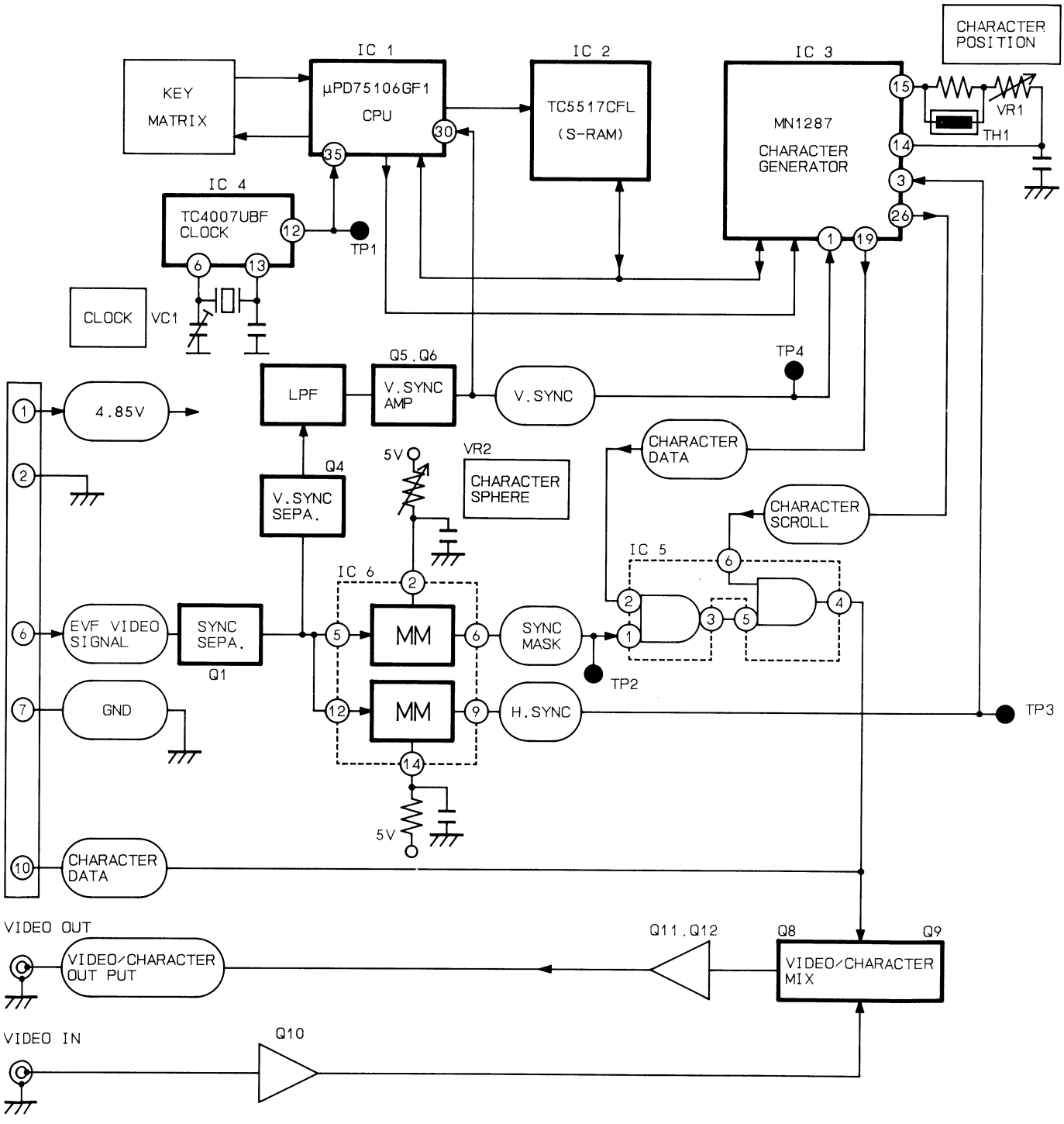

BACK UP	APPLOX·3.7V～4.8V
CPU RESET	VDD LESS THAN 3.3V
AUTO DATE INITIAL VALUE	12:00 1987. 1. 1
STOP WATCH	MAXIMUM 9:59:59:9 MINIMUM 1/10 sec.

1-3-2 MAIN C.B.A. (VEP66051D,E)

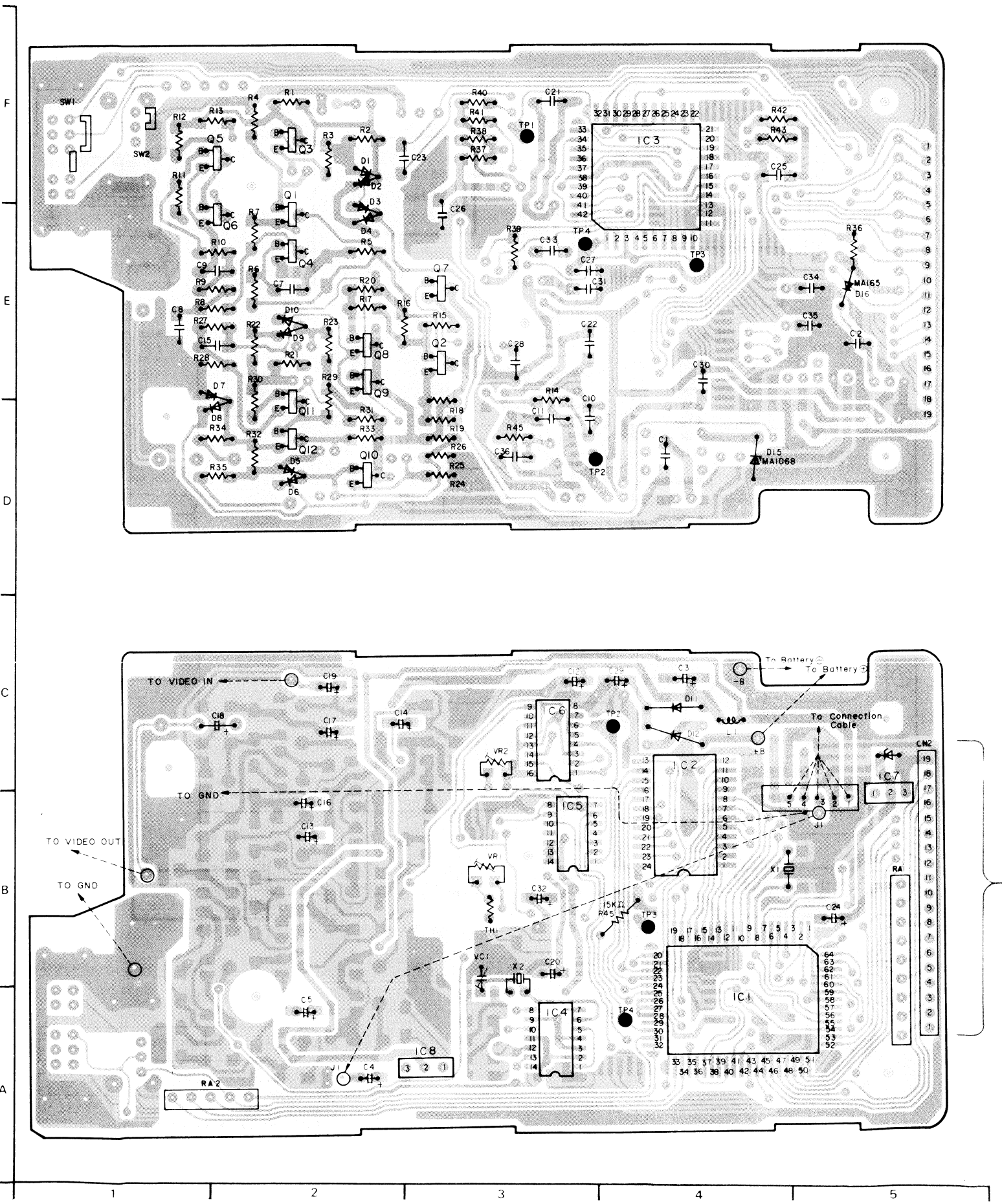

1-3-3 SWITCH C.B.

MAIN C.B.A.	
Transistor	
Q1	E-2
Q2	B-3
Q3	F-2
Q4	E-2
Q5	F-2
Q6	E-2
Q7	E-3
Q8	E-2
Q9	D-2
Q10	D-2
Q11	D-2
Q12	D-2
Integrated Circuit	
IC1	A-5
IC2	C-4
IC3	F-4
IC4	A-4
IC5	B-3
IC6	C-3
IC7	C-5
IC8	A-3
Test Point	
TP1	F-3
TP2	D-4
TP3	E-4
TP4	E-4
Adjustment	
VR1	B-3
VR2	C-3
VC1	B-3

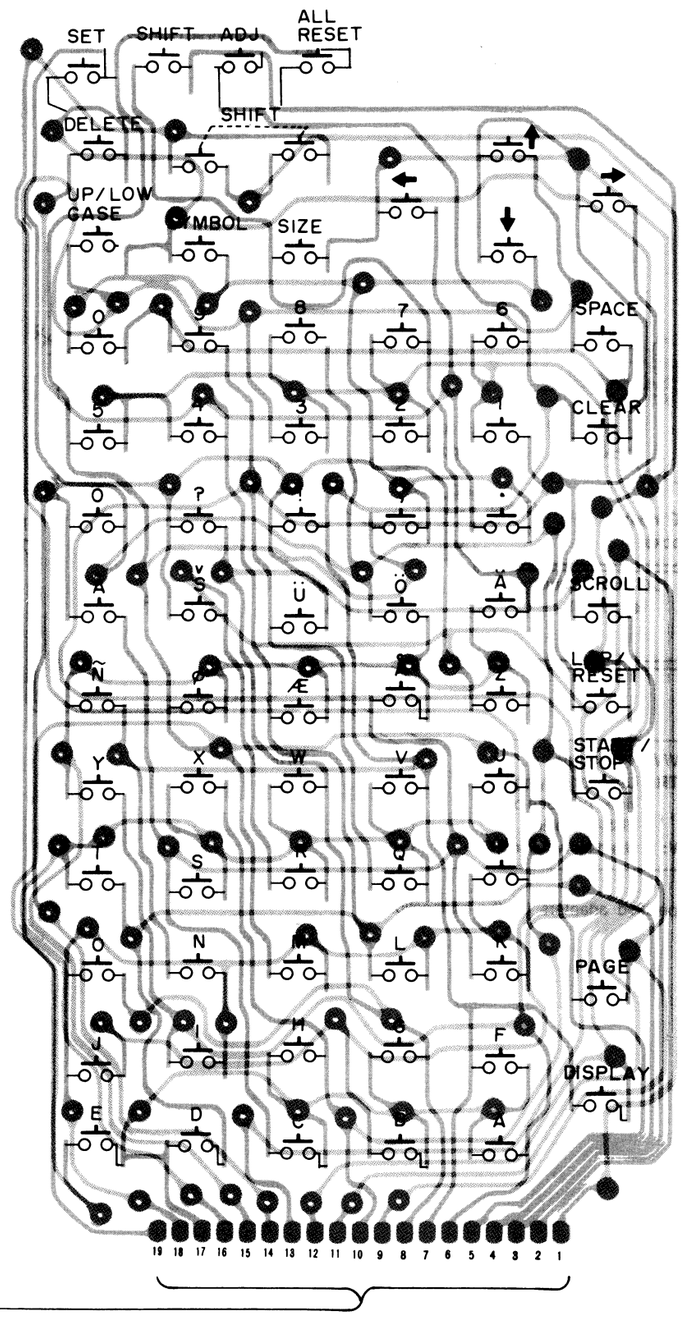

1-3-4 SCHEMATIC DIAGRAM

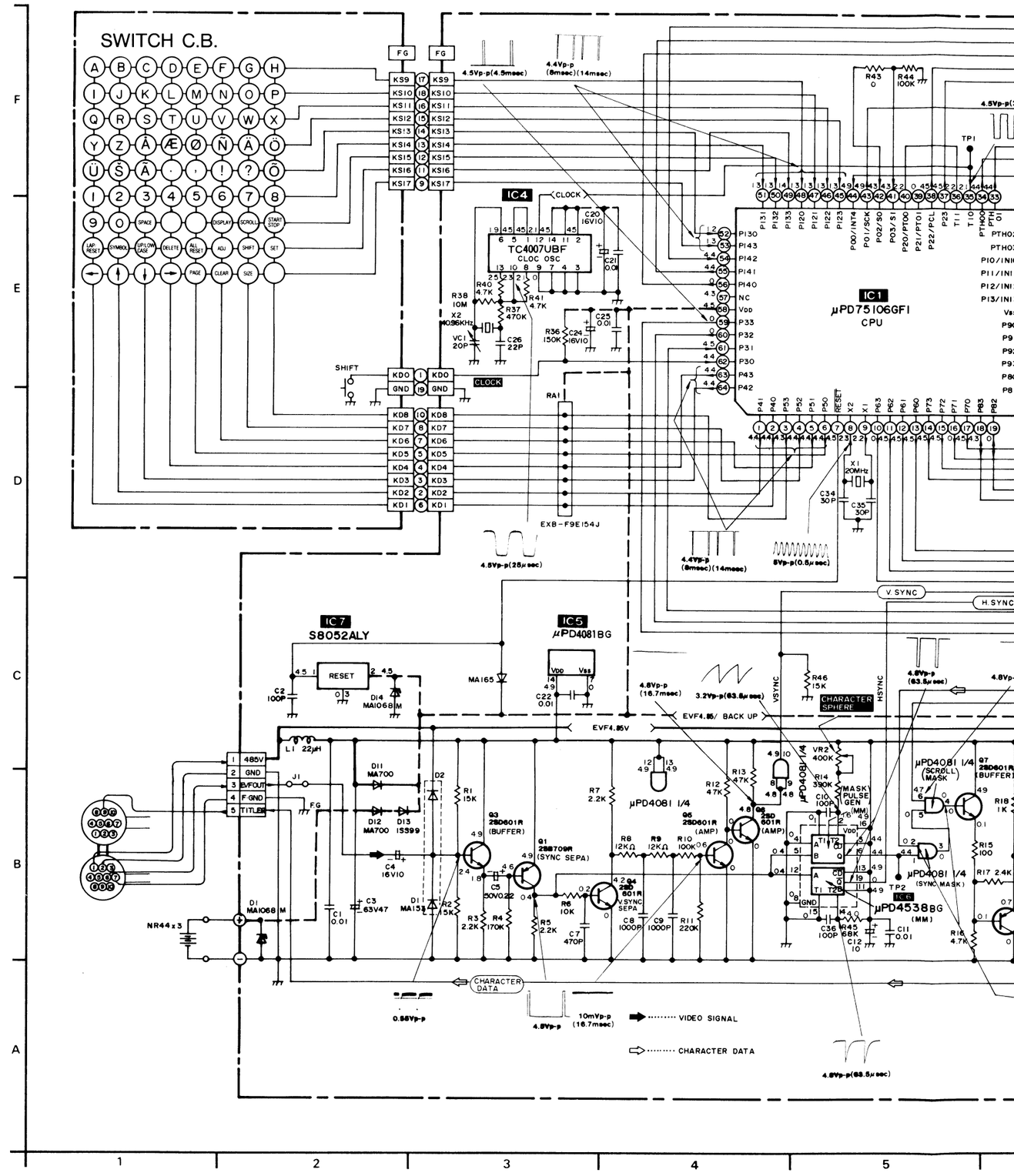

1-3-4 SCHEMATIC DIAGRAM

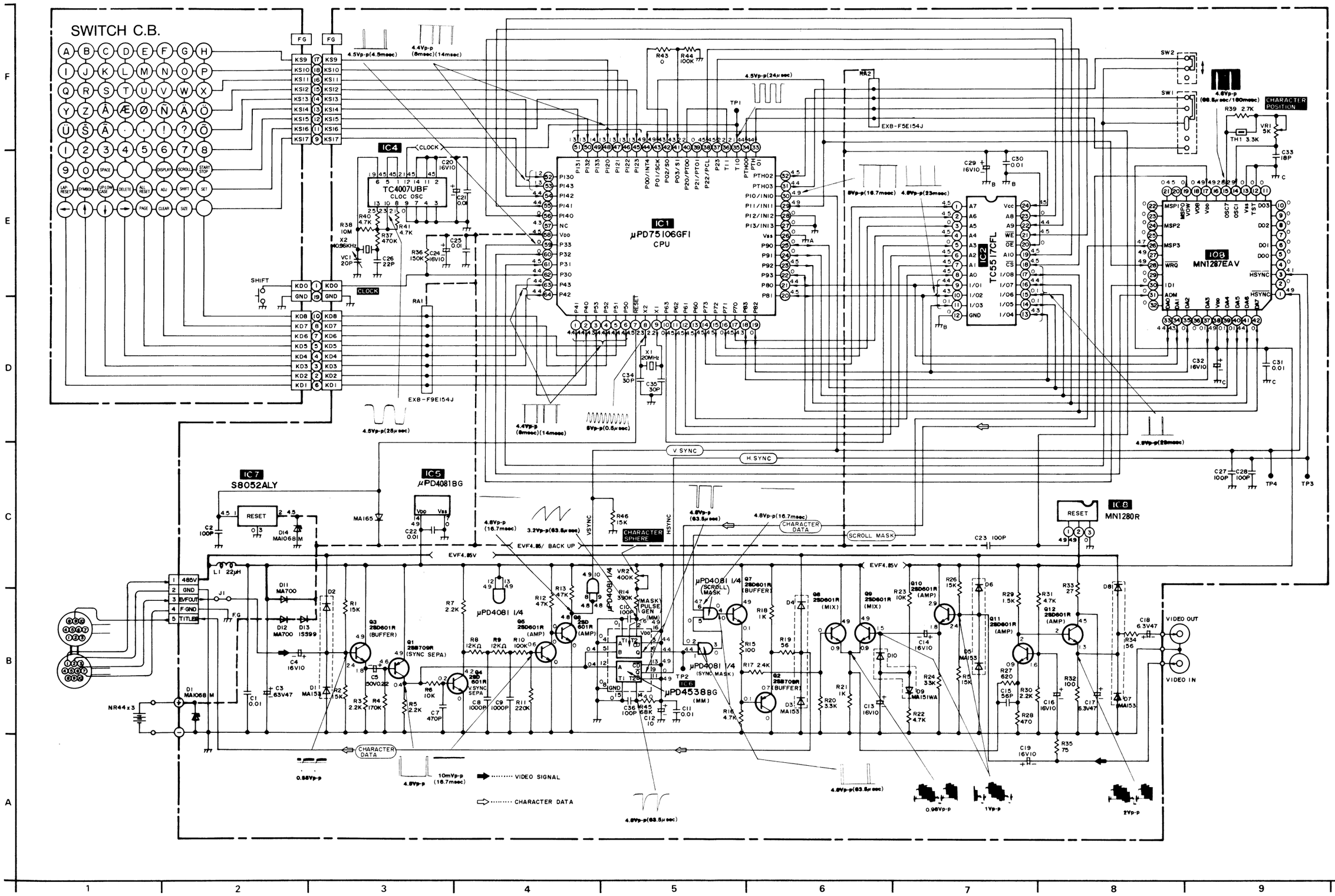

SECTION 4 : Exploded Views

1-4-1 CHARACTER GENERATOR SECTION

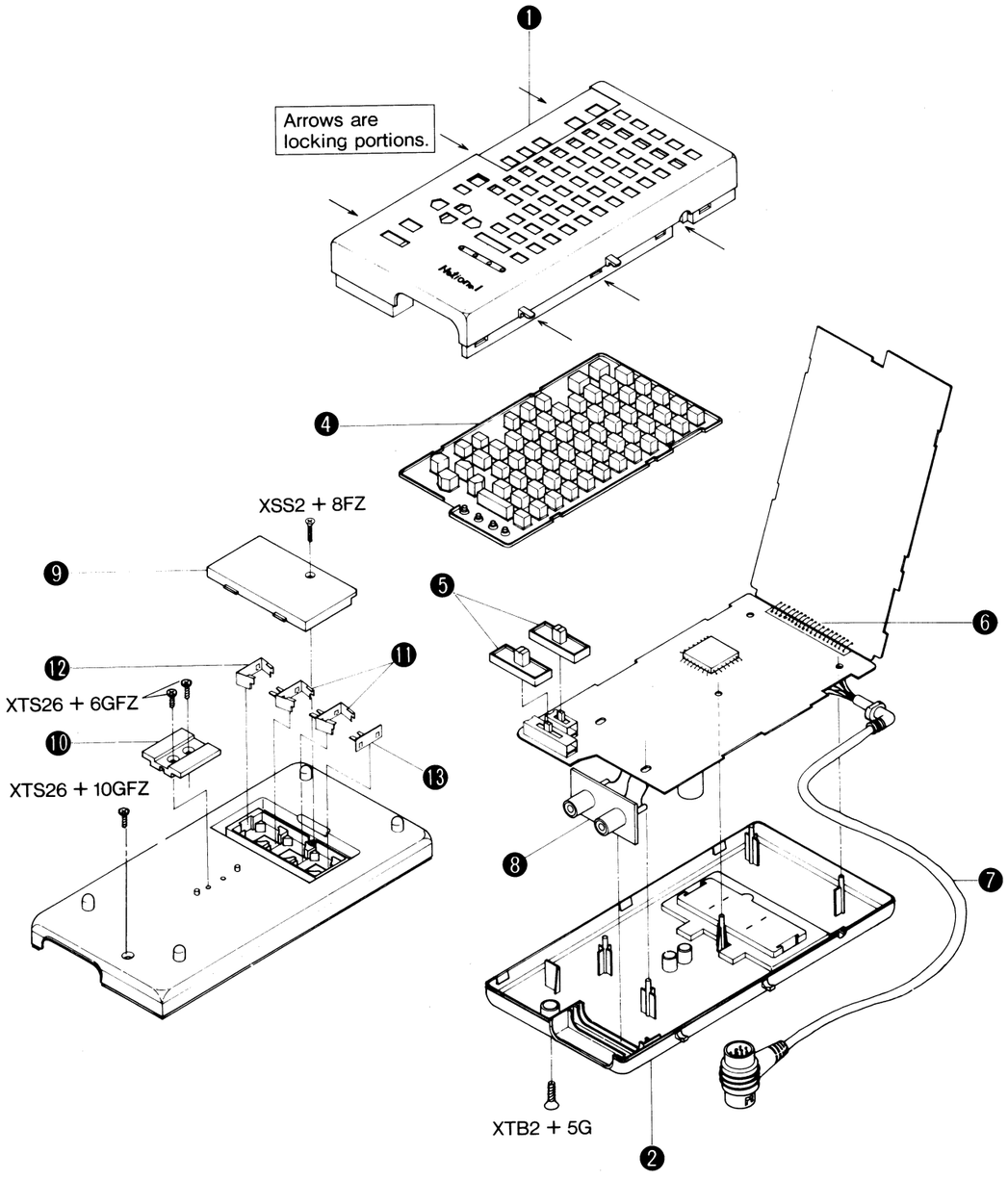

1-4-2 PACKING SECTION

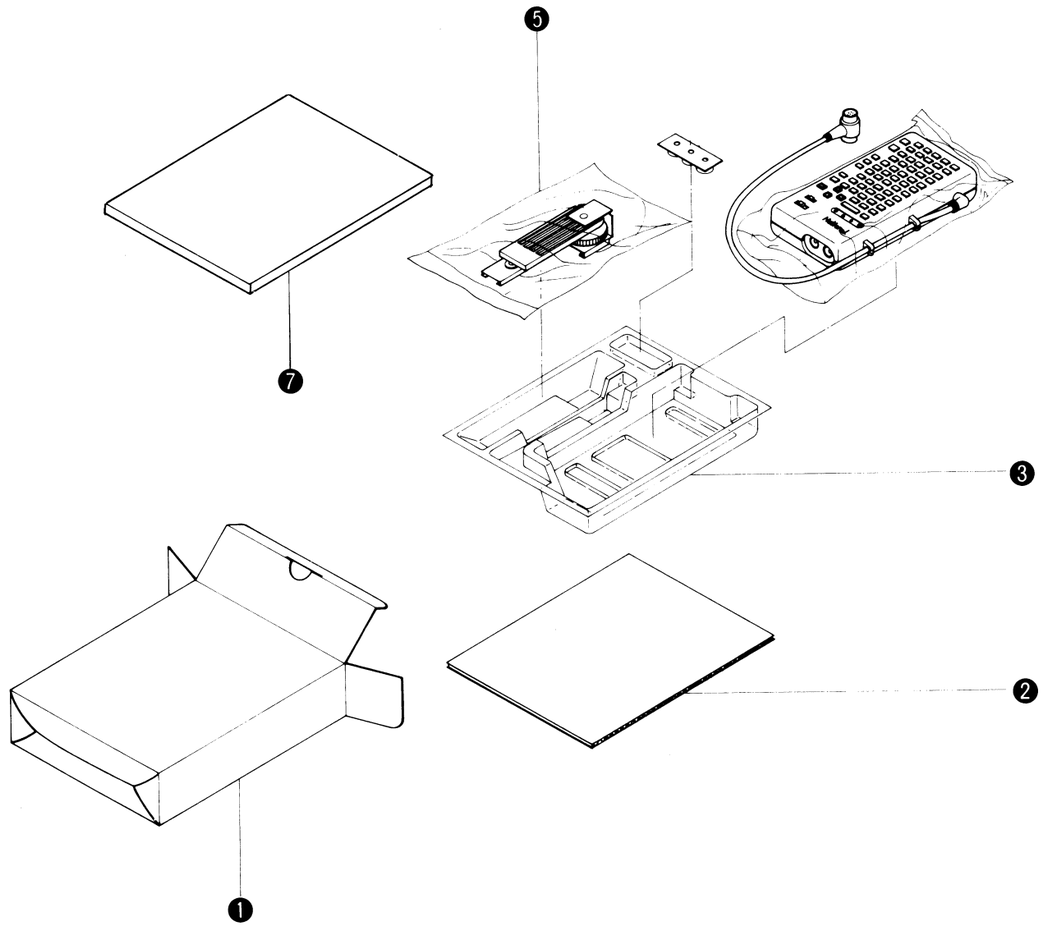

2. V

2-1

RF/AV
Adaptor
Socket

Note: On

1-4-2 PACKING SECTION

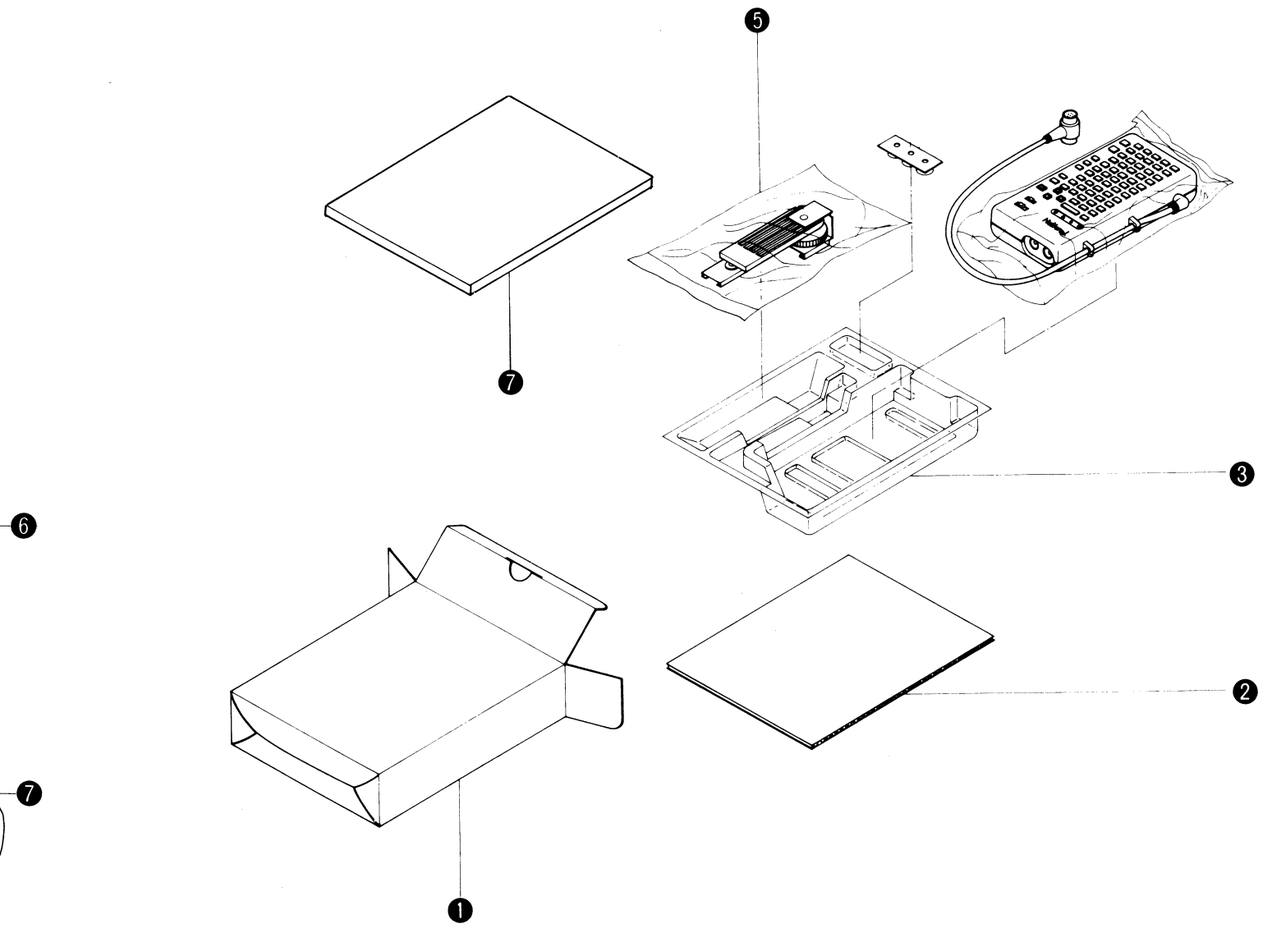

2. VW-RFC1E, B, A, EN

2-1 HOW TO ADJUST THE RF CONVERTER FREQUENCY

(1) Make connection as shown in Fig.R-1.
(2) Adjust the TV channel to no programme (bloadcasting) position with UHF 36CH+-4CH (E,B,EN) or VHF 0/1 (A).
(3) Adjust the RF Adaptor Outpt Channel.

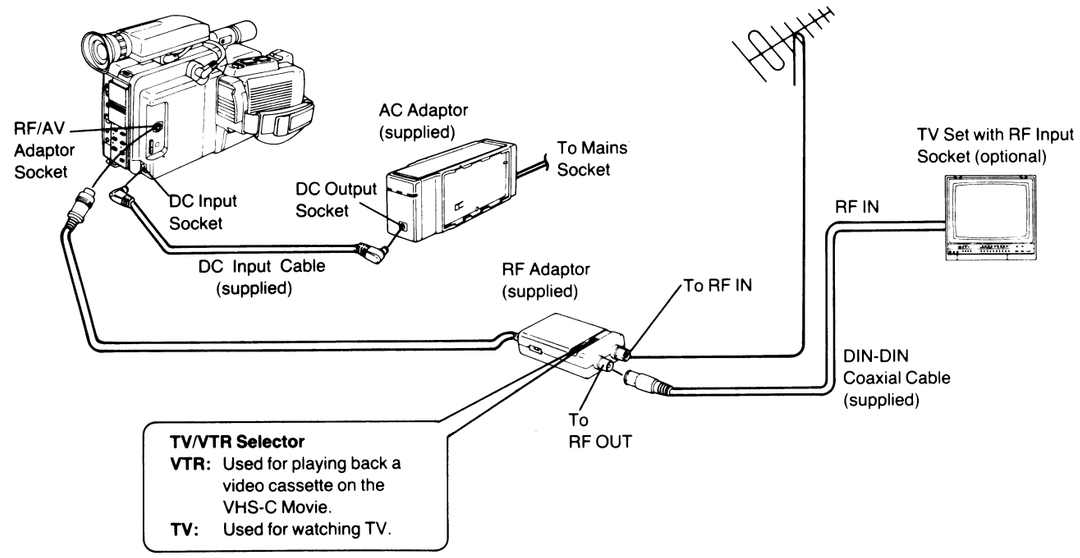

Note: Only use the specified adaptors for the connections.

2-2 SCHEMATIC DIAGRAM (VW-RFC1E,B,EN)

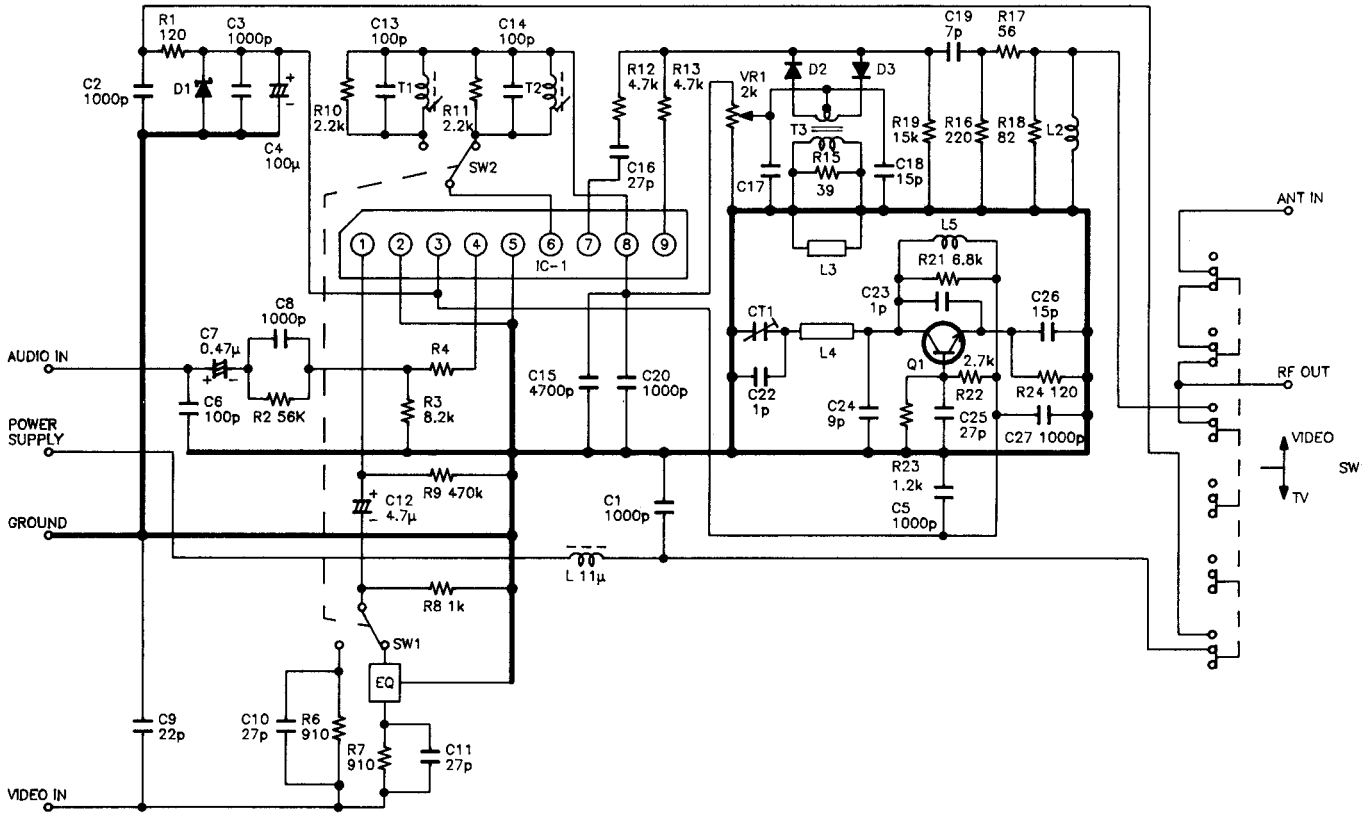

SCHEMATIC DIAGRAM (VW-RFC1A)

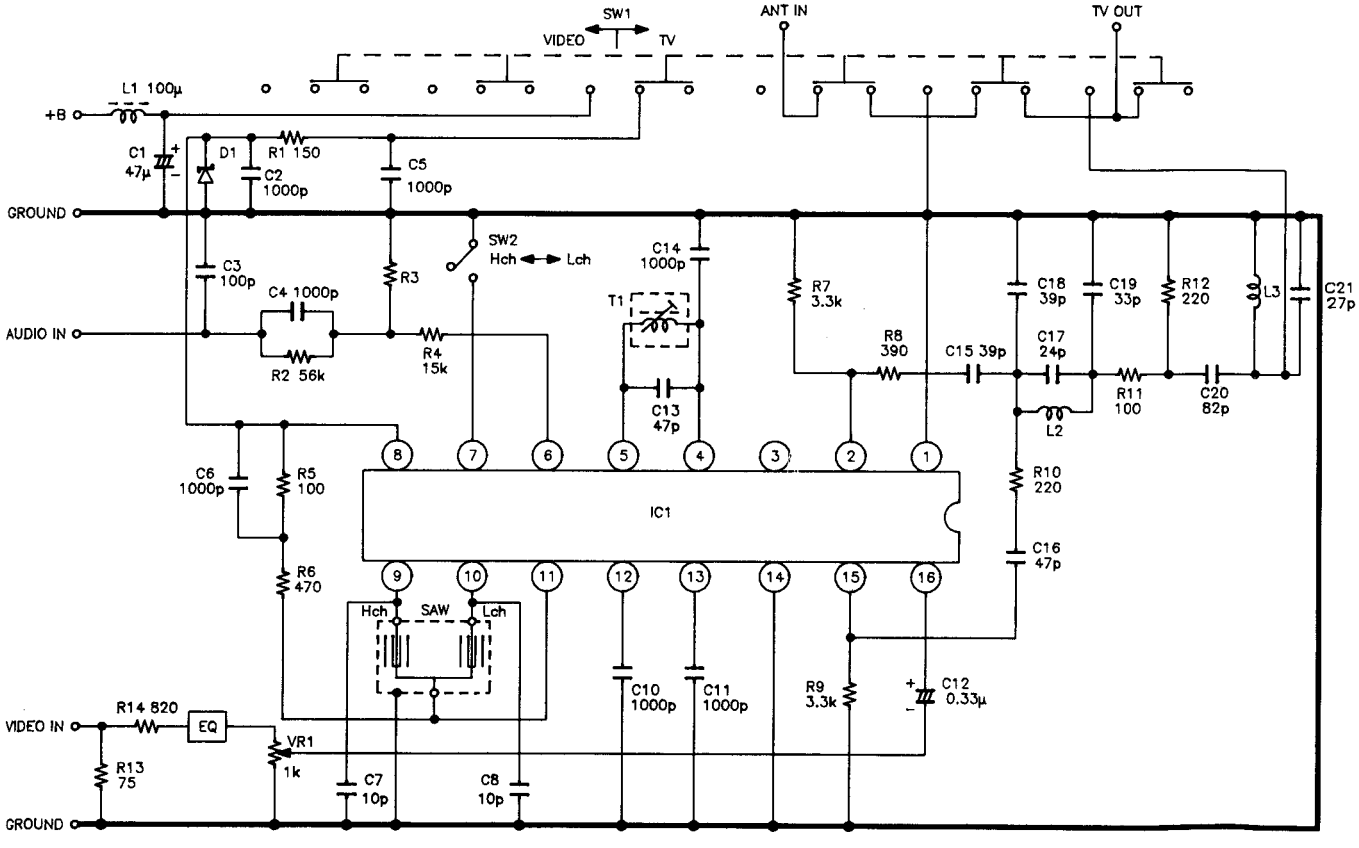

2-3 EXPLODED VIEW

❸ RF ADAPTOR

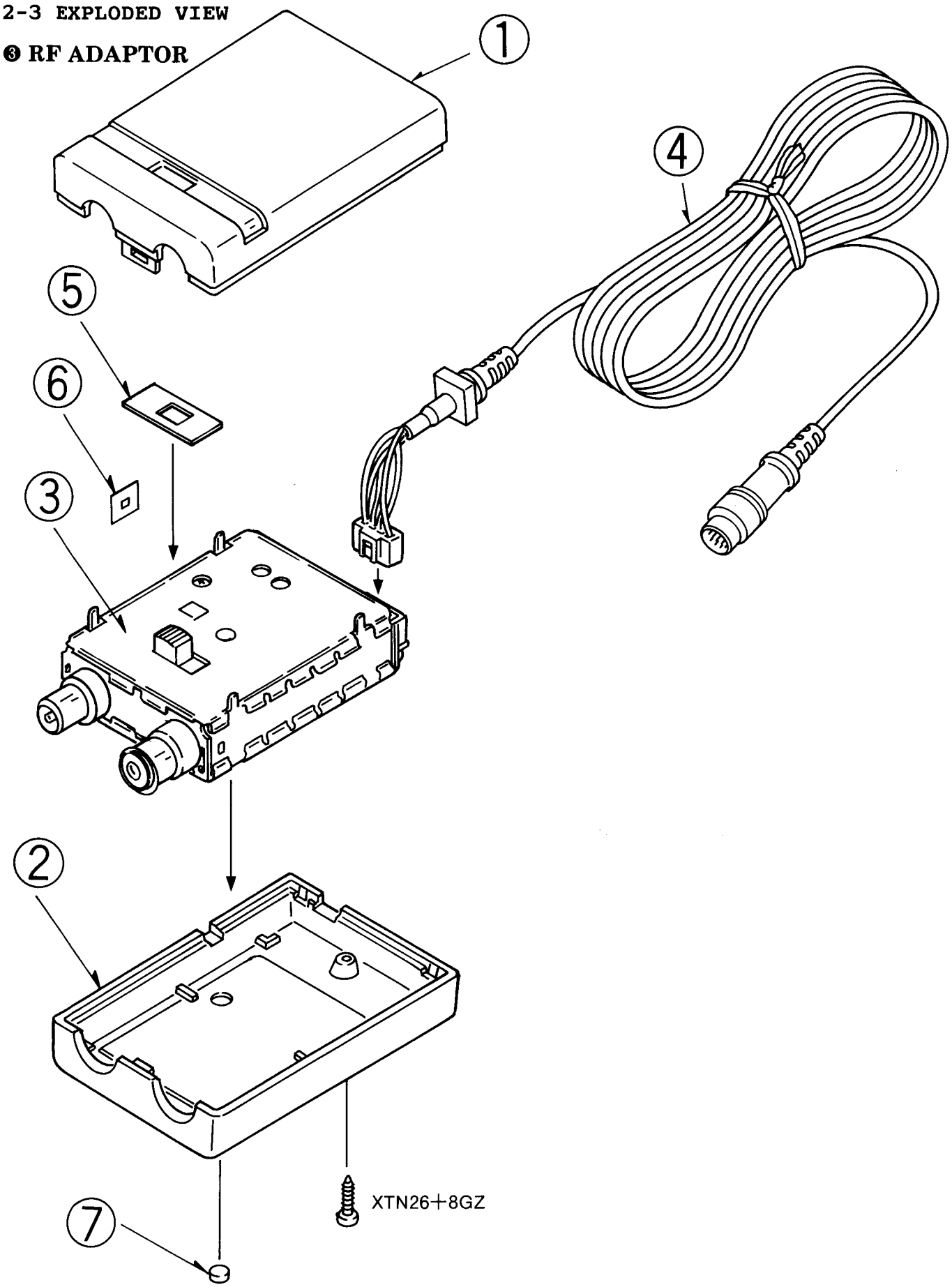

3. VW-SHMC1E, EN

3-1 EXPLODED VIEW

❸ SYSTEM CARRYING CASE

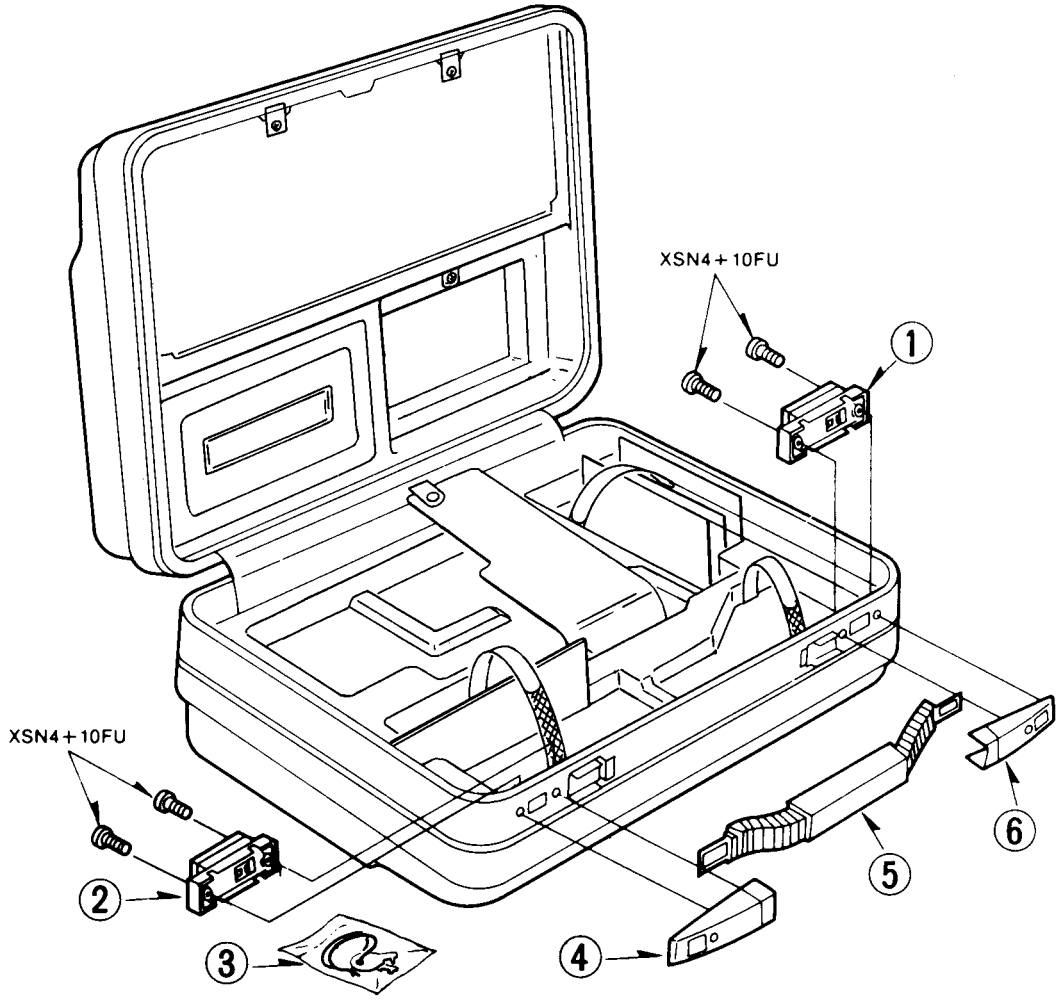

4. VW-GPC1E

4-1 HOW TO USE THE HANDGRIP

❶

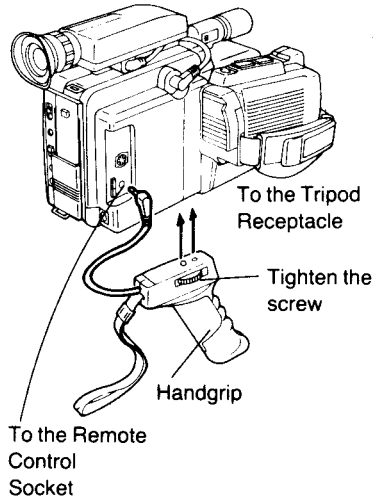

❷

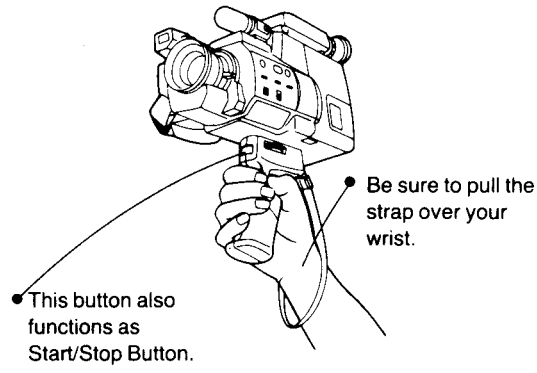

4-2 EXPLODED VIEW

❹ HAND GRIP

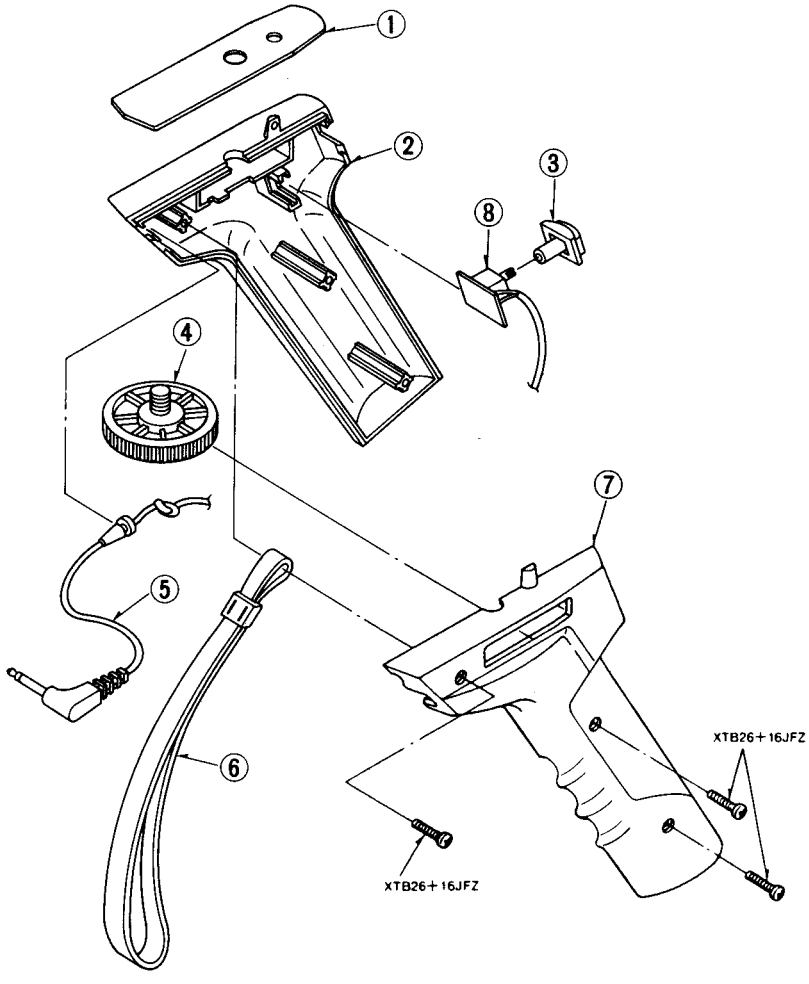

PARTS LIST

MODEL NO: VW-CG1E/EN, VW-RFC1E/B/A/EN, VW-SHMC1E/EN, VW-GPC1E

1.VW-CG1E/EN Mechanical Replacement Parts List

Note: 1.* Be sure to make your orders of replacement parts according to this list.
2.IMPORTANT SAFETY NOTICE
Components identified with the mark <!> have the special characteristics for safety. When replacing any of these components,use only the same type.

Ref.No.		Part No.	Part Name & Description	Pcs	Remarks
1(1)		VKM1170	UPPER CASE	1	VW-CG1E
1(1)		VKM1253	UPPER CASE	1	VW-CG1EN
2(1)		VKM1039	BOTTOM CASE	1	
4(1)		VSP0301	LUBBER CONTACT	1	
5(1)		VGU4094	SWITCH KNOB	1	
7(1)		VJA0490	OUTPUT CABLE	1	
8(1)		VJA0671	VIDEO TERMINAL	1	VW-CG1E
8(1)		VJA0675	VIDEO TERMINAL	1	VW-CG1EN
9(1)		VKF1003	BATTERY COVER	1	
10(1)		VMP1514	SHOE INSTALLATION BOARD	1	
11(1)		VJR0403	BATTERY TERMINAL (COM)	1	
12(1)		VJR0404	BATTERY TERMINAL (+)	1	
13(1)		VJR0405	BATTERY TERMINAL (-)	1	
14(2)		VPK0753	PACKING CASE	1	VW-CG1E
14(2)		VPK0766	PACKING CASE	1	VW-CG1EN
15(2)		VPN2048	PAD	1	
16(2)		VPN2030	CUSHION	1	
17(2)		VFC0151	SHOE ADAPTOR	1	
18(2)		VQT2484	OPERATING INSTRUCTION	1	VW-CG1E
18(2)		VQT2485	OPERATING INSTRUCTION	1	VW-CG1EN

To guarantee the FUNCTION,SAFETY and RELIABLITY of repaired units,only use ORIGINAL REPLACEMENT PARTS which are listed with their part numbers in this parts list section.

2.VW-CG1E/EN Electrical Replacement Parts List

Note:1.* Be sure to make your orders of replacement parts according to this list.
2.IMPORTANT SAFETY NOTICE
Components identified with the mark <!> have the special characteristics for safety. When replacing any of these components,use only the same type.
3.Unless otherwise specified,
All resistors are in OHMS ,K=1,000 OHMS. All capacitors are in MICROFARADS(uf),P=uuF.
4.The P.C.Board units marked width'■'show below the main assembled parts.
5.Printed circuit board assembly with mark(NLA) is no longer available after discontinuation of the product.

Ref.No.		Part No.	Part Name & Description			Pcs	Remarks
		VEP66051D	MAIN C.B.A.			1	VW-CG1EN
		VEP66015E	MAIN C.B.A.			1	VW-CG1E
	■	VEP66015D	MAIN C.B.A.				VW-CG1EN
	■	VEP66015E	MAIN C.B.A.				VW-CG1E
			CAPACITORS				
C1		ECUX1H103KBM	CHIP	50V	0.01U	1	
C2		ECUX1H101JCM	CHIP	50V	100P	1	
C3		ECEA0JKS470	E.CAPACITOR	6.3V	47U	1	
C4		ECEA1CKK100	E.CAPACITOR	16V	10U	1	
C5		ECEA1HKKR22	E.CAPACITOR	50V	0.22U	1	
C7		ECUX1H471KCM	CHIP	50V	470P	1	
C8		ECUX1H102JCM	CHIP	50V	1000P	1	
C9		ECUX1H102JCM	CHIP	50V	1000P	1	
C10		ECUX1H101JCM	CHIP	50V	100P	1	
C11		ECUX1H103KBM	CHIP	50V	0.01U	1	
C12		ECEA1CKK100	E.CAPACITOR	16V	10U	1	
C13		ECEA1CKK100	E.CAPACITOR	16V	10U	1	
C14		ECEA1CKK100	E.CAPACITOR	16V	10U	1	
C15		ECUX1H560JCM	CHIP	50V	56P	1	
C16		ECEA1CKK100	E.CAPACITOR	16V	10U	1	
C17		ECEA0JKS470	E.CAPACITOR	6.3V	47U	1	
C18		ECEA0JSS471	E.CAPACITOR	6.3V	470U	1	
C19		ECEA1CKK100	E.CAPACITOR	16V	10U	1	
C20		ECEA1CKK100	E.CAPACITOR	16V	10U	1	
C21		ECUX1H103KBM	CHIP	50V	0.01U	1	
C22		ECUX1H103KBM	CHIP	50V	0.01U	1	
C23		ECUX1H101JCM	CHIP	50V	100P	1	
C24		ECEA1CKK100	E.CAPACITOR	16V	10U	1	
C25		ECUX1H103KBM	CHIP	50V	0.01U	1	
C26		ECUX1H220KCM	CHIP	50V	22P	1	
C27		ECUX1H101JCM	CHIP	50V	100P	1	
C28		ECUX1H101JCM	CHIP	50V	100P	1	
C29		ECEA1CKK100	E.CAPACITOR	16V	10U	1	
C30		ECUX1H103KBM	CHIP	50V	0.01U	1	
C31		ECUX1H103KBM	CHIP	50V	0.01U	1	
C32		ECEA1CKK100	E.CAPACITOR	16V	10U	1	
C33		ECUX1H180JCM	CHIP	50V	18P	1	
C34		ECUX1H300JCM	CHIP	50V	30P	1	
C35		ECUX1H300JCM	CHIP	50V	30P	1	
C36		ECUX1H101JCM	CHIP	50V	100P	1	
			DIODES				

Ref.No.		Part No.	Part Name & Description			Pcs	Remarks
D1(D2)		MA153	DIODE			1	
D3(D4)		MA153	DIODE			1	
D5(D6)		MA153	DIODE			1	
D7(D8)		MA153	DIODE			1	
D9(D10)		MA153	DIODE			1	
D11		MA700	DIODE			1	
D12		MA165	DIODE			1	
D14		MA1068M	DIODE			1	
		MA1068M	DIODE			1	
		MA165	DIODE			1	
			INTEGRATED CIRCUITS				
IC1		UPD75106GF1	IC			1	
IC2		TC5517CFL	IC			1	
IC3		MN1287EAV	IC			1	
IC4		TC4007UBF	IC			1	
IC5		UPD4081BG	IC			1	
IC6		UPD4538BG	IC			1	
IC7		S8052ALY	IC			1	
IC8		MN1280R	IC			1	
			COIL				
L1		ELO405SKI220	COIL		22UH	1	
			TRANSISTORS				
Q1		2SB709R	TRANSISTOR			1	
Q2		2SB709R	TRANSISTOR			1	
Q3		2SD601R	TRANSISTOR			1	
Q4		2SD601R	TRANSISTOR			1	
Q5		2SD601R	TRANSISTOR			1	
Q6		2SD601R	TRANSISTOR			1	
Q7		2SD601R	TRANSISTOR			1	
Q8		2SD601R	TRANSISTOR			1	
Q9		2SD601R	TRANSISTOR			1	
Q10		2SD601R	TRANSISTOR			1	
Q11		2SD601R	TRANSISTOR			1	
Q12		2SD601R	TRANSISTOR			1	
			RESISTORS				
R1		ERJ8GCYJ153	CHIP	1/8W	15K	1	
R2		ERJ8GCYJ153	CHIP	1/8W	15K	1	
R3		ERJ8GCYJ222	CHIP	1/8W	2.2K	1	
R4		ERJ8GCYJ474	CHIP	1/8W	470K	1	
R5		ERJ8GCYJ222	CHIP	1/8W	2.2K	1	
R6		ERJ8GCYJ103	CHIP	1/8W	10K	1	
R7		ERJ8GCYJ222	CHIP	1/8W	2.2K	1	
R8		ERJ8GCYJ123	CHIP	1/8W	12K	1	
R9		ERJ8GCYJ123	CHIP	1/8W	12K	1	
R10		ERJ8GCYJ104	CHIP	1/8W	100K	1	
R11		ERJ8GCYJ224	CHIP	1/8W	220K	1	
R12		ERJ8GCYJ473	CHIP	1/8W	47K	1	
R13		ERJ8GCYJ473	CHIP	1/8W	47K	1	
R14		ERJ8GCYJ394	CHIP	1/8W	390K	1	
R15		ERJ8GCYJ101	CHIP	1/8W	100	1	
R16		ERJ8GCYJ472	CHIP	1/8W	4.7K	1	
R17		ERJ8GCYJ242	CHIP	1/8W	2.4K	1	
R18		ERJ8GCYJ102	CHIP	1/8W	1K	1	
R19		ERJ8GCYJ560	CHIP	1/8W	56	1	
R20		ERJ8GCYJ332	CHIP	1/8W	3.3K	1	
R21		ERJ8GCYJ102	CHIP	1/8W	1K	1	
R22		ERJ8GCYJ472	CHIP	1/8W	4.7K	1	
R23		ERJ8GCYJ103	CHIP	1/8W	10K	1	
R24		ERJ8GCYJ332	CHIP	1/8W	3.3K	1	

To guarantee the FUNCTION,SAFETY and RELIABLITY of repaired units,only use ORIGINAL REPLACEMENT PARTS which are listed with their part numbers in this parts list section.

Ref.No.		Part No.	Part Name & Description	Pcs	Remarks
R25		ERJ8GCYJ153	CHIP 1/8W 15K	1	
R26		ERJ8GCYJ153	CHIP 1/8W 15K	1	
R27		ERJ8GCYJ621	CHIP 1/8W 620	1	
R28		ERJ8GCYJ471	CHIP 1/8W 470	1	
R29		ERJ8GCYJ152	CHIP 1/8W 1.5K	1	
R30		ERJ8GCYJ222	CHIP 1/8W 2.2K	1	
R31		ERJ8GCYJ472	CHIP 1/8W 4.7K	1	
R32		ERJ8GCYJ101	CHIP 1/8W 100	1	
R33		ERJ8GCYJ270	CHIP 1/8W 27	1	
R34		ERJ8GCYJ560	CHIP 1/8W 56	1	
R35		ERJ8GCYJ750	CHIP 1/8W 75	1	
R36		ERJ8GCYJ154	CHIP 1/8W 150K	1	
R37		ERJ8GCYJ474	CHIP 1/8W 470K	1	
R38		ERJ8GCYJK106	CHIP 1/8W 10M	1	
R39		ERJ8GCYJ272	CHIP 1/8W 2.7K	1	
R40		ERJ8GCYJ472	CHIP 1/8W 4.7K	1	
R41		ERJ8GCYJ472	CHIP 1/8W 4.7K	1	
R43		ERJ8GCY0R00	CHIP 1/8W 0	1	
R44		ERJ8GCYJ104	CHIP 1/8W 100K	1	
R45		ERJ8GCYJ683	CHIP 1/8W 68K	1	
R46		ERJ8GCYJ153	CHIP 1/8W 15K	1	
			COMBINATION PARTS		
RA1		EXBF9E154J	RESISTOR-RESISTOR	1	
RA2		EXBF5E154J	RESISTOR-RESISTOR	1	
			SWITCHS		
SW1		ESD14511	SWITCH	1	
SW2		ESD14513	SWITCH	1	
			THERMISTER		
TH1		ERTD2FHK332	THERMISTER	1	
			VARIABLE CAPACITOR		
VC1		VCV0032	TRIMMER	1	
			VARIABLE RESISTOR		
VR1		VRE0041	V.RESISTOR	1	
VR2		VRE0042	V.RESISTOR	1	
			CRYSTAL OSCILLATORS		
X1		VSX0260	CRYSTAL OSCILLATOR	1	
X2		VSX0259	CRYSTAL OSCILLATOR	1	
			MISCELLANEOUS		
		VWJ0329	JUMPER WIRE 19P	1	

Ref.No.		Part No.	Part Name & Description	Pcs	Remarks

To guarantee the FUNCTION,SAFETY and RELIABLITY of repaired units,only use ORIGINAL REPLACEMENT PARTS which are listed with their part numbers in this parts list section.

3.VW-RFC1E/B/A/EN Mechanical Replacement Parts List

Note:1.* Be sure to make your orders of replacement parts according to this list.
2.IMPORTANT SAFETY NOTICE
Components identified with the mark <!> have the special characteristics for safety. When replacing any of these components,use only the same type.

Ref.No.		Part No.	Part Name & Description	Pcs	Remarks
1(3)		VKM1195	UPPER CASE	1	VW-RFC1E,B,A
1(3)		VKM1294	UPPER CASE	1	VW-RFC1EN
2(3)		VYK1792	BOTTOM CASE	1	VW-RFC1E
2(3)		VYK1791	BOTTOM CASE	1	VW-RFC1B
2(3)		VYK1793	BOTTOM CASE	1	VW-RFC1A
2(3)		VYK1794	BOTTOM CASE	1	VW-RFC1EN
3(3)		VEQ0658	RF CONVERTER UNIT	1	VW-RFC1E,EN
3(3)		VEQ0657	RF CONVERTER UNIT	1	VW-RFC1B
3(3)		VEQ0655	RF CONVERTER UNIT	1	VW-RFC1A
4(3)		VJA0474	INPUT CABLE	1	
5(3)		VGF0260	LIGHT SHUT PLATE (1)	1	
6(3)		VGF0261	LIGHT SHUT PLATE (2)	1	
7(3)		VGF0262	RUBBER CAP	1	VW-RFC1E,B,EN

To guarantee the FUNCTION,SAFETY and RELIABLITY of repaired units,only use ORIGINAL REPLACEMENT PARTS which are listed with their part numbers in this parts list section.

4.VW-RFC1E/B/A/EN Electrical Replacement Parts List

Note:1.* Be sure to make your orders of replacement parts according to this list.
2.IMPORTANT SAFETY NOTICE
Components identified with the mark <!> have the special characteristics for safety. When replacing any of these components,use only the same type.
3.Unless otherwise specified,
All resistors are in OHMS ,K=1,000 OHMS. All capacitors are in MICROFARADS(uf),P=uuF.
4.The P.C.Board units marked width'▮'show below the main assembled parts.
5.Printed circuit board assembly with mark(NLA) is no longer available after discontinuation of the product.

Ref.No.		Part No.	Part Name & Description	Pcs	Remarks
		VEQ0568	RF COVERTER UNIT	1	VW-RFC1E/B/EN
		VEQ0656	RF COVERTER UNIT	1	VW-RFC1A
			DIODE		
D1		HZ5C1F5	ZENER	1	
D2		1SS198	DIODE	1	VW-RFC1E/B/EN
D3		1SS198	DIODE	1	VW-RFC1E/B/EN
			INTEGRATED CIRCUIT		
IC1		LA7054	IC	1	VW-RFC1E/B/EN
IC1		TA8637	IC	1	VW-RFC1A
			TRANSISTOR		
Q1		2SC2759	TRANSISTOR	1	VW-RFC1E/B/EN
			NOTE:THE OTHER PARTS FOR		
			RF CONVERTER UNIT		
			ARE NOT AVAILABLE AS		
			SPARE PARTS		

To guarantee the FUNCTION,SAFETY and RELIABLITY of repaired units,only use ORIGINAL REPLACEMENT PARTS which are listed with their part numbers in this parts list section.

5.VW-SHMC1E/EN Mechanical Replacement Parts List

Note:1.* Be sure to make your orders of replacement parts according to this list.
2.IMPORTANT SAFETY NOTICE
Components identified with the mark <!> have the special characteristics for safety. When replacing any of these components,use only the same type.

Ref.No.		Part No.	Part Name & Description	Pcs	Remarks
1(4)		VYQ0034	LOCK BOX (R)	1	
2(4)		VYQ0036	LOCK BOX (L)	1	
3(4)		VYC0096	KEY	1	
4(4)		VYQ0035	LOCK UNIT (L)	1	
5(4)		VYH0093	HANDLE UNIT	1	
6(4)		VYQ0033	LOCK UNIT (R)	1	
		VPG3906	PACKING CASE	1	VW-SHMC1E
		VPG3907	PACKING CASE	1	VW-SHMC1EN

To guarantee the FUNCTION,SAFETY and RELIABLITY of repaired units,only use ORIGINAL REPLACEMENT PARTS which are listed with their part numbers in this parts list section.

6.VW-GPC1E Mechanical Replacement Parts List

Note:1.* Be sure to make your orders of replacement parts according to this list.
2.IMPORTANT SAFETY NOTICE
Components identified with the mark <!> have the special characteristics for safety. When replacing any of these components,use only the same type.

Ref.No.		Part No.	Part Name & Description	Pcs	Remarks
1(5)		VGQ1443	LEATHER SHEET	1	
2(5)		VKH0183	GRIP (R)	1	
3(5)		VGU4027	TALLY SWITCH BUTTON	1	
4(5)		VKGW0069	HANDLE HOLDER	1	
5(5)		VJA0479	PLUG CODE	1	
6(5)		VFBW0014	HAND STRAP	1	
7(5)		VKH0182	GRIP (L)	1	
8(5)		VEP60096A	SWITCH C.B.A.	1	
		VQT2527	OPERATING INSTRUCTION	1	
		VPK0830	PACKING CASE	1	

To guarantee the FUNCTION,SAFETY and RELIABLITY of repaired units,only use ORIGINAL REPLACEMENT PARTS which are listed with their part numbers in this parts list section.